Installation/Owners Manual

Patriot™ RSL

Slide Gate Operator

USAutomatic®

MADE IN THE USA

PATRIOT Series AUTOMATIC GATE OPERATORS

This Patriot Gate Operator is intended to be installed on the four different classes of gate operators identified in the UL325 Standards.

RESIDENTIAL VEHICULAR GATE OPERATOR – CLASS I
A vehicular gate operator (or system) intended for use in garages or parking areas associated with a residence of one-to four single families.

COMMERCIAL/GENERAL ACCESS VEHICULAR GATE OPERATOR – CLASS II
A vehicular gate operator (or system) intended for use in a commercial location or building such as a multi-family housing unit (five or more single family units), hotel, garages, retail store, or other buildings accessible by or servicing the general public.

INDUSTRIAL/LIMITED ACCESS VEHICULAR GATE OPERATOR – CLASS III
A vehicular gate operator (or system) intended for use in an industrial location or building such as a factory or loading dock area or other locations not accessible by or intended to service the general public.

RESTRICTED ACCESS VEHICULAR GATE OPERATOR – CLASS IV
A vehicular gate operator (or system) intended for use in a guarded industrial location or building such as an airport security area or other restricted access locations not servicing the general public, in which unauthorized access is prevented via supervision by security personnel.

Solar Friendly

The Patriot system design and the accessories recommended are all Solar Friendly meaning that they require the least amount of energy possible to perform the job they were designed to do. The solar option allows you to install the gate operator in remote areas or in applications where you prefer to be solar charged. Solar charging provides additional isolation from lightning that might damage the unit via the AC power needed for the DC Adapter.

BATTERY REQUIRED FOR OPERATION *(Battery not included)*

Recommended battery type:

Battery 12-volt, Group U-1; sealed (maintenance free); 30 amp hour minimum.
Using a smaller amp hour battery may cause damage to the charging system.
The wiring harness has two 1/4” ring terminals to connect to battery posts.

CAUTION: Do not install wet cell battery into control box; this type of battery usually has removable caps used for service and will vent into control box.

The battery may be charged using the 120V AC Powered Transformer (PN 520009) **OR** the Patriot Solar Panel kit (PN 520028). Typically only one panel will be required. For information on what you can expect from a solar charged system see the solar charging section of this manual. Accessories that are added to your gate operator must be solar friendly accessories.

PLEASE READ THE ENTIRE MANUAL CAREFULLY PRIOR TO INSTALLATION.

Study the entire Safety Section paying particularly close attention to the entrapment zones and install monitored entrapment devices to protect all entrapment zones identified. Installation by a Qualified Technician is recommended to verify all safety concerns are addressed.

© USAutomatic, LLC, 2025 rev. A
All rights reserved. No part of this manual may be reproduced by any means without the expressed written consent of the publisher.
USAutomatic Part # 720005

TABLE OF CONTENTS

INTRODUCTION

Entrapment Zones 2-3
Safety Installation Information 4-5
Patriot RSL Parts Inventory 6
Patriot RSL Hardware Inventory 7
General Tool Requirements 7

PREPARATION AND OVERVIEW

Gate Qualifications/Applications 8
Proper Gate Design 8
Operator Illustration and Descriptions 9

INSTALLATION STEPS

1. Mounting Site Review 10
2. Mounting Operator 11
2a. Post Mount Installation 12
2b. Pad Mount Installation 13
3. Install Chain Brackets to Gate 14
4. Connect Chain 14
5. Adjust Chain Tension 14
6. Install Patriot Control Board 15
7. Install Brake Release Cable 15
8. Installing Receiver and Battery Controller / Entrapment Siren 15
9. Installing Monitored Entrapment Protection Devices 16
9a. Monitored Photo Eye (Type B1) Installation 16-17
9b. Monitored Contact Edge (Type B2) Installation 18
9c. Constant Pressure (TypeD) Installation 18
10. Install Battery 19
11. Install Battery Controller Power Source (AC or Solar) 19
11a. AC Charge System 19
11b. Solar Charged System 20
12. Connect Power Source to Battery Controller 21
13. Install Safety Signs 21
14. Connect Wire Harness Cable to Control Board 21
15. Photo Eye Alignment 21
16. Operating Gate For The First Time 22
17. Limit Switch Final Adjustment 23
18. PWM 24
19. Sensitivity Adjustment and Entrapment Alarm 26
20. Verifying Inherent Entrapment Protection System (Type A) Operation 26
21a. Verifying Monitored Photo Eye (Type B1) 27
21b. Verifying Monitored Contact Edge (Type B2) 27
21c. Verifying Constant Pressure (Type D) 27
22. Programming Transmitter and Receiver 28-29
23. Install Emergency Release Access Cover 29

PATRIOT RSL CONTROL BOARD INFORMATION 30-33
PROGRAMMING YOUR WIRELESS KEYPAD 34-36
USAUTOMATIC BATTERY CONTROLLER 37
PERIODIC SERVICE / EMERGENCY MANUAL RELEASE 38
ACCESSORIES 39-41
TROUBLESHOOTING GUIDE 42
SOLAR TAX CERTIFICATE 44
WARRANTY 45

Entrapment Devices Required and Approved for Operation

Effective August 1, 2018 a vehicular swing gate operator must have provisions for, or be supplied with, at least two independent entrapment protection means for each direction of travel as specified in current UL325 standard Table 31.1. At installation, both entrapment protection devices must be installed and operational before gate operation is allowed. *Exception allowed if no entrapment exist in one direction of travel then only 1 device is required, the other direction must have 2 entrapment protection devices active. The gate operator will monitor for proper operation before movement is allowed.

USAutomatic control boards utilize type A (Inherent entrapment protection system) as the first entrapment protection means identified. The second entrapment device identified must be a monitored Type B1 or Type B2 device that has been tested and approved with the gate operator.These devices are listed below.

USAutomatic control boards can monitor one photo eye (B1) for the open direction, one photo eye (B1) for the closed direction and two contact edges (B2) for the open/close direction. If additional entrapment devices are required the USAutomatic expansion module (part # 500015) is required

Type B1 - Non-contact sensor (photoelectric sensor or the equivalent). Identified as Normally Closed N/C contact switching.

Type B2 - Contact sensor (edge device or the equivalent). Identified as 10K resistor installed for presence monitoring.

Type D - Actuating device requiring continuous pressure to maintain motion of the gate.

External entrapment devices approved for use are listed below

Wired Contact Edge Type B2 Devices

Manufacturer: ASO
Models: Sentir Edge 95.25, 92.20, 85, 35.55, 65, 25.30, 25.45, 15.10

Manufacturer: Miller Edge
Models: MGR20, MGS20, ME120, MG020, ME112, MG123

Wireless Contact Edge Type B2 Devices

Transmitter Solutions: IGAZE RE KIT-UL

EMX Model: WEL-200K

Non-Contact sensors (photoelectric sensor or the equivalent) Type B1 Devices

Manufacturer: USAutomatic, LLC
Models: 550011, 550014

The entrapment zones illustrations on the following page defines the most common entrapment areas. It is the responsibility of the installer to identify all entrapment areas and install the appropriate compliant monitored entrapment device or devices to protect each area identified.

USAutomatic recommends upgrading all systems to current UL325 standards.

ENTRAPMENT ZONES

The illustrations below are a guide to help identify entrapment areas for slide gate installations that must be protected. Other entrapment areas may exist and must be identified by the installer and protected by the appropriate monitored entrapment protection device for the situation.

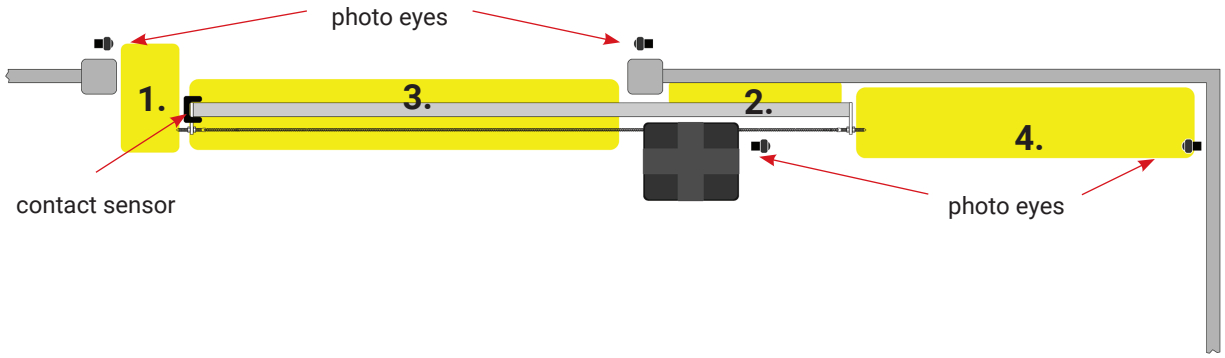

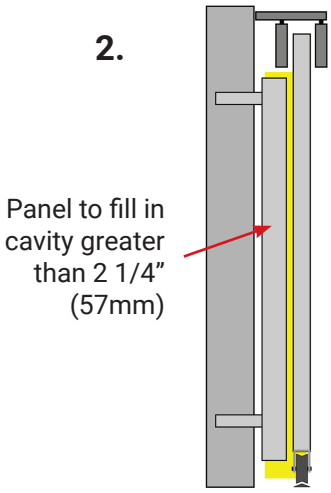

Zone 1 - Leading edge of gate where it meets a stop post, 2nd gate or other immovable object. Recommended monitored entrapment protection type B1 wireless contact sensor or type B2 photo eye or equivalent.

Zone 2 - A gap, measured in the horizontal plane parallel to the roadway, between a fixed stationary object nearest the roadway (such as a gate support post) and the gate frame when the gate is in either the fully open position or the fully closed position, shall not exceed 2 1⁄4 in. (57 mm).

Exception: All other fixed stationary objects greater than 16 in. (406 mm) from the gate frame shall not be required to comply with this section.

Zone 3 - The path the gate travels. Recommended monitored entrapment protection type B1 photo eye or equivalent.

Zone 4 - Gate opens toward an immoveable object with less than 16 inches of clearance - recommended monitored entrapment protection type B1 photo eye or equivalent. If space is less than 16", entrapment protection in this area is required.
(ASTM F2200: 7.1.1.1 and 7.1.1.2)

IMPORTANT SAFETY INSTRUCTIONS

WARNING - TO REDUCE THE RISK OF SEVERE INJURY OR DEATH

1. READ AND FOLLOW ALL INSTRUCTIONS
2. SAVE THESE INSTRUCTIONS!!
3. Always keep people and objects away from the gate. NO ONE SHOULD CROSS THE PATH OF A MOVING GATE.
4. Test the gate operator monthly. The gate MUST reverse on contact with a rigid object or stop when an object activates the non-contact sensors. After adjusting the force or the limit of travel, retest the gate operator. Failure to adjust and retest the gate operator properly can increase the risk of severe injury or death.
5. After all adjustments have been made to the sensitivity (current sense) circuit, secondary entrapment devices and all other external devices installed, the safety devices must be checked again. Failure to adjust and retest the gate operator can increase the risk of severe injury or death. A qualified technician should check these periodically for proper operation.
6. Use the manual release ONLY when gate is not moving, and power is disconnected.
7. KEEP GATES PROPERLY MAINTAINED. Tighten all bolts and grease hinges and pivot points.
8. THE ENTRANCE IS TO BE USED BY VEHICLES ONLY. The operator is intended for installation only on gates used for vehicles. Pedestrians must be supplied with a separate access opening. The pedestrian access opening shall be designed to promote pedestrian usage. Locate the pedestrian gate such that persons will not come in contact with the vehicular gate during the entire path of travel of the vehicular gate.
9. Never let children operate or play with gate controls or any other activation device. Keep remote control away from children.
10. The gate must be installed in a location so that enough clearance is supplied between the gate and adjacent structures when opening and closing to reduce the risk of entrapment.
11. Do not attempt to enter the gate area while the gate is moving. Wait until the gate comes to a complete stop.
12. DO NOT ALLOW CHILDREN TO PLAY IN THE AREA OF THE GATE.
13. Do not allow anyone to ride on the gate.
14. Operate the gate only when it is fully visible, free of persons or obstructions, and properly adjusted.
15. All controls must be located at least six feet away from the gate to eliminate the chance of the person operating the gate from coming in contact with the moving gate. Do not install external buttons, which can be used to operate the gate within the reach of children.
    **Exception: Emergency access controls only accessible by authorized personnel may be placed at any location in line-of-sight of the gate.*
16. Both Safety Signs must be installed, one on each side of the gate and visible in the gate area.

Install the gate operator when:

- Operator is appropriate for the construction of the gate and usage class is correct for the installation.
- All exposed pinch points are eliminated or guarded.
- One or more contact sensors shall be located where the risk of entrapment or obstruction exist, such as the leading edge, trailing edge and post mounted both inside and outside of a vehicular slide gate.
- The gate is properly installed and moves freely in both directions. Do not over adjust the sensitivity adjustment to compensate for an improper gate installation.
- All openings of a horizontal slide gate are guarded or screened from the bottom of the gate to a minimum of 72 inches (1.83m) above the ground to prevent a 2 1/4 inch (57.2m) diameter sphere from passing through the openings anywhere in the gate, and in that portion of the adjacent fence that the gate covers in the open position. The gate panel shall include the entire section of the moving gate, including any back frame or counterbalance portion of the gate.
- The Reset button must be located in the line-of-sight of the gate. Activation of the reset button shall not cause the operator to start.
- Guarding is supplied for all weight bearing exposed rollers below 8 ft. or less above grade.

Non Contact Sensors - Type B1 - Photo Eyes or equivalent

1. See entrapment zones for suggestions on placement of sensors.
2. Care shall be exercised to reduce the risk of nuisance tripping, such as when a vehicle trips the sensor while the gate is still moving.
3. One or more non-contact sensors shall be located where the risk of entrapment or obstruction exist, such as the area reachable by a moving gate.

Contact Sensors - Type B2 - Contact Edge or equivalent

1. See entrapment zones for suggestions on placement of sensors.
2. A hardwired sensor shall be located and its wiring arranged so that the wiring between the sensor and the gate operator is not subjected to mechanical damage.
3. A wireless device such as one that transmits (RF) signals to the gate operator for entrapment protection functions shall be located where the transmission of the signals are not obstructed or impeded by building structures , natural landscaping or similar obstruction. A wireless device shall function under the intended end-use conditions.
4. One or more contact sensors shall be located where the risk of entrapment or obstruction exist, such as at the leading edge, trailing edge, and post mounted both inside and outside of a vehicular horizontal slide gate.

Constant Pressure - Type D - Emergency switch or equivalent

1. The gate operator controls must be placed so that the user has full view of the gate area when the gate is moving.
2. An automatic closing device (such as a timer, loop sensor, or similar device) shall not be employed. and no other activation device shall be connected.
3. Placard required shall be placed adjacent to the controls.

PARTS INVENTORY

All Operators include:

Part # 590010 Slider Frame

Part # 590020 Slider Cover

Part # 500026 Control Board

Emergency Release Access Cover

Part # 590030

Battery Controller

Part # 520001

DC Adapter
DC output @ 20 vdc - 1 amp

Part # 520009

with AC Models

10 Watt Solar Panel Kit

Part # 520028

with Solar Models

Secondary Entrapment Siren 12vdc

Part # 530015

Charge Control Harness

Part # 630100

Photo Eye Kit with Batteries

Part # 550011

LCR 2 Button Basic Transmitter

Part # 030210

2 per

LCR Low Current Dual Channel Receiver

Part # 030205

Safety Signs

Part # 601025

2 per

Optional Accessories & LCR Items:

See accessories section for complete list and descriptions

USAutomatic WiFi App Module - Part# 030223

LCR 4 Button Basic Transmitter - Part # 030212

LCR 2 Button Premium Transmitter - Part # 030217

LCR 4 Button Premium Transmitter - Part # 030218

LCR Wireless Push to Operate Button - Part # 030215

LCR Basic Wireless Keypad - Part # 050500

LCR Premium Metal Wireless Keypad - Part # 050551

Premium Metal Hardwired Keypad - Part # 050700

Electric Gate Lock - Part # 070510

7 Day Timer - Part # 550015

CP-4 Free Exit Device - Part # 070305

Photo Eye Kit - Part # 550011

Metal Photo Eye Kit - Part # 550014

20 Watt Solar Panel Kit - Part # 520031

HARDWARE INVENTORY

Chain Bracket
Part # 570010
2 per

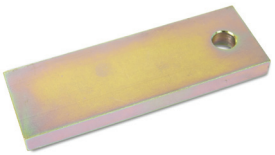

Chain Adjustment Bolt
Part # 570020
2 per

1/2" Adjustment Nuts
Part # 620070
4 per

Chain #41 - 10ft
Part # 640010
3 - 10' Boxes
4- Master Links

#41 Master Link
Part # 640020
4 per

1/4" x 1" Bolt
Part # 620012
4 per

1/4" SAE Washer
Part # 620013
4 per

Screwdriver
1 per

Warning Placard
Part # 601015
1 per

GENERAL TOOL REQUIREMENTS

- SAE Standard wrenches 7/16, 3/4
- Clamps
- Level
- ¼ Inch Nut Driver
- Needle Nose Pliers
- Tape measure
- Chain Cutter
- Tape Measure
- Phillips Head Screwdriver

Your particular installation may require a welder, drill, or other hardware not included.

PREPARATION AND OVERVIEW

GATE QUALIFICATIONS/APPLICATIONS

This gate operator is rated for gates up to 32 feet in length and up to 1000 pounds in weight. If your gate exceeds either one of these limits, please consult a qualified technician or the factory for application questions and advice.

USAutomatic is not responsible for failure to comply with the current UL325 standards, local building codes or improper installations.

Concrete pad mounting or post mounting by a qualified installer is the recommended method of securing the operator.

Note: High quality rollers with bearings will allow your gate to operate with minimal drag (minimal friction) and will decrease the load on the gate operator. Many type of slide gate designs exist. Choose a design that will decrease friction and required torque.

PROPER GATE DESIGN

IMPORTANT- A GATE OPERATOR CANNOT OVERCOME A POORLY DESIGNED GATE.

Since the gate is a major component of the system, great care and concern must be given to the gate design. USAutomatic, LLC is not responsible for any damage to a gate on which the gate operator is installed. A poorly installed or misadjusted gate could be damaged. It is the responsibility of the installer to verify proper gate installation prior to operator installation. As a general rule, a gate, which is to be automatically operated, must be stronger and smoother than one operated manually.

- Does the gate slide smoothly without binds or excessive resistance?
- Slide gates should slide level and plumb to prevent the operator from having to pull the gate up or down grade when opening or closing.
- Is the gate frame of substantial strength without excessive weight?
- Will the gate hit the catch correctly without being hand-guided or pushed into the catch?
- Are the bearings / wheels suited for the number of cycles expected per day?
- Is the track area designed to keep dirt and rocks from obstructing the gate movement?

If any of these problems exist, they must be corrected to achieve a reliable automatic gate system.

All Gates must have smooth bottom edges, no protrusions should exist. If gate hardware or sensors protrude, they must have smooth surfaces free of any sharp cutting edges that do not exceed ½ inch beyond the base of the gate. (ASTM F2200)

All weight bearing exposed rollers 8 ft (2.44 m), or less, above grade shall be guarded or covered.

Positive stops shall be required to limit travel to the designed fully open and fully closed positions. These stops shall be installed at either the top of the gate, or at the bottom of the gate where such stops shall horizontally or vertically project no more than is required to perform their intended function.

All gates shall be designed with sufficient lateral stability to assure that the gate will enter a receiver guide.

Operator Illustration and Descriptions

TOP VIEW

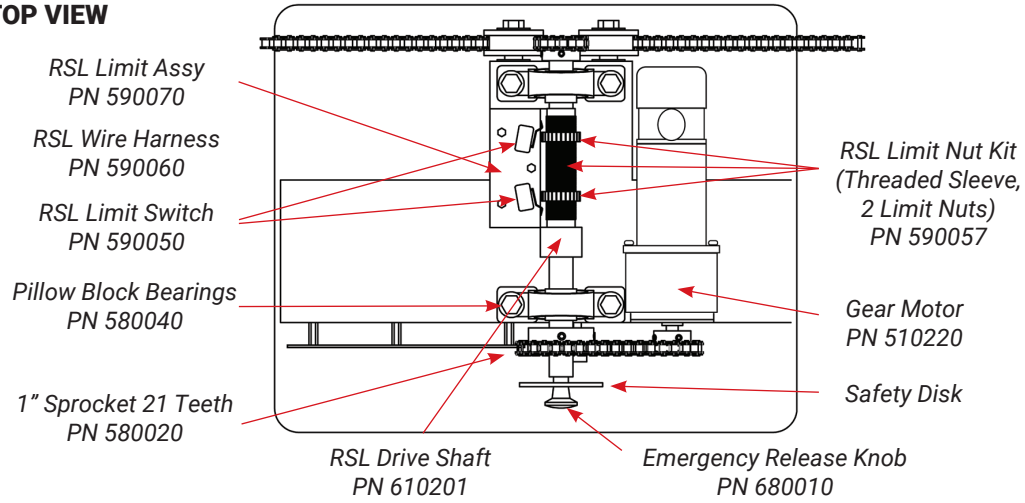

FRONT VIEW

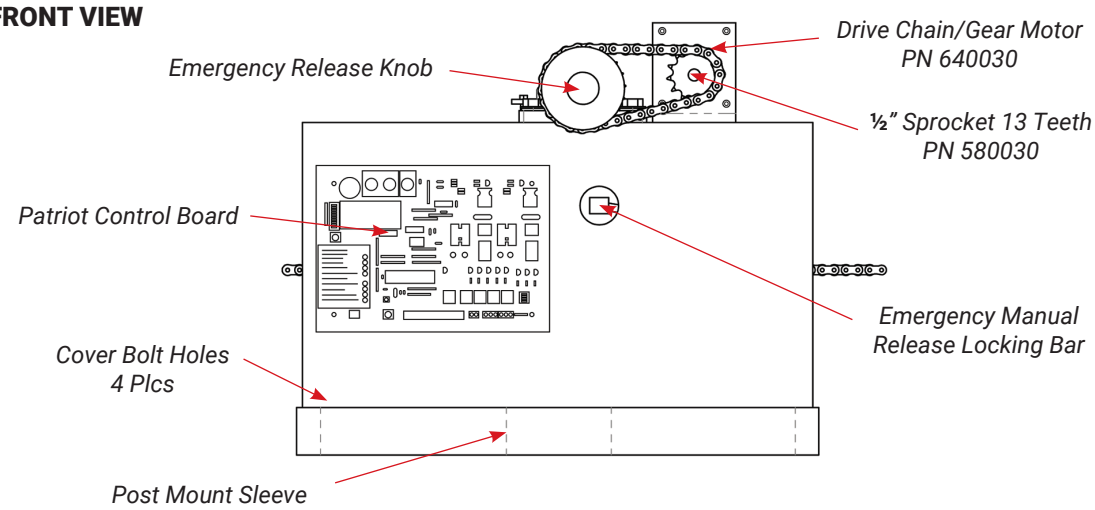

REAR VIEW

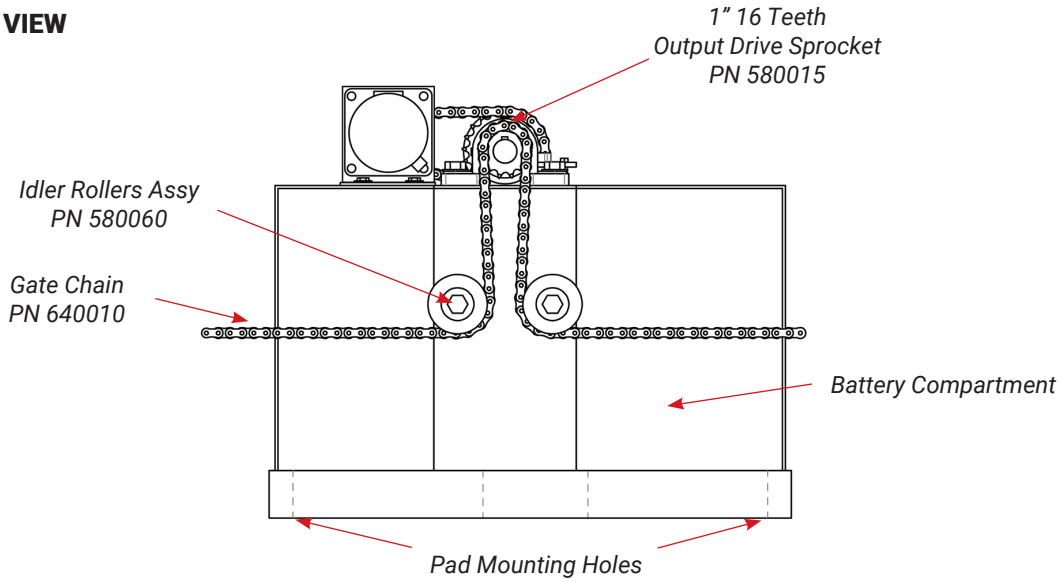

1 Mounting Site Review

Review the following items prior to installation and predetermine the solution to any problems which may exist:

1. Will the unit open the gate by sliding to the left or the right?
   Standing on the inside of the property looking out, an operator installed to the left of the drive is a left hand installation, an operator installed to the right is a right hand installation. See below.
2. How will the chain brackets attach to the gate? *See page 14 Step 3*
3. How will the operator be mounted (on a pad or on a post) *See page 11 Step 2.*
4. For AC Charged System - *See page 19 Step 11a*
5. For Solar Charged System - *See page 20 Step 11b*
6. How will accessory control wiring, if any, be brought to the control box? Knockouts are provided in operator base plate for conduit connections. *See page 13*
7. Have all entrapment areas been identified? *See page 3*

Do not mount in areas by automatic sprinklers, or flood prone areas. It is important that the control board, control devices, and the battery compartment stay dry.

NOTE: Regardless of mounting method, ensure that operator base does not extend into the driveway area, where damage from traffic could occur.

Right Hand - Left Hand Installation

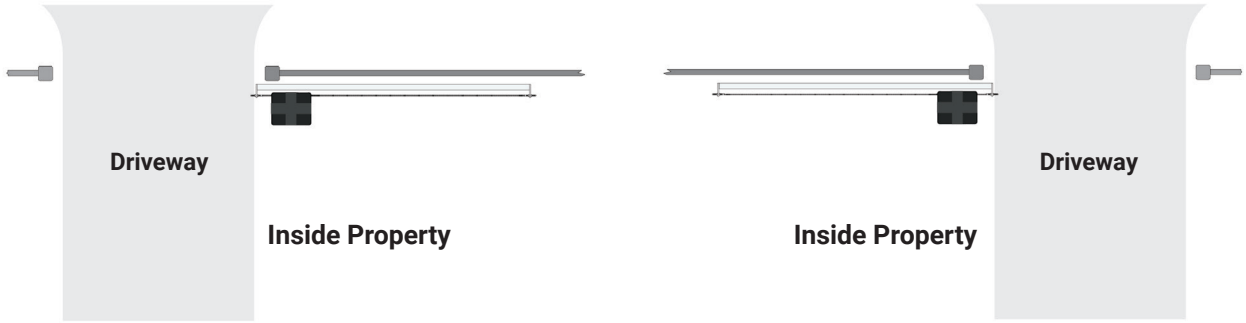

Right Hand Installation

Gate shown in open position

Left Hand Installation

Gate shown in open position

2 Mounting Operator

PAD MOUNT

The operator base has four pre drilled holes and four access holes, which are covered with press in hole plugs. These holes are sized to accommodate ½ anchor bolts and the plugged hole will accept a standard size ¾ inch socket. Keep the operator parallel with the gate while securing.

POST MOUNT

The operator base is equipped with a four-inch post receiver located on the bottom of the base. This receiver will accept a square or round four-inch post. Keep the operator parallel with the gate and level while securing in place.

Set the operator in place (pad or post). Ensure that the chain bolts, once installed, will be properly aligned with the chain rollers. Once alignment is verified, secure operator in place using bolts for pad installation and welding for post installation. Keep the operator parallel with the gate while securing in place.

Correct dimensions for installed operator - Pad or Post mount

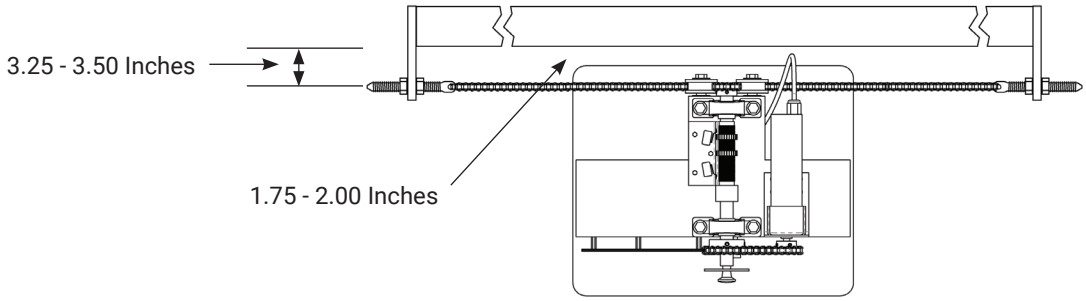

Correct Installation

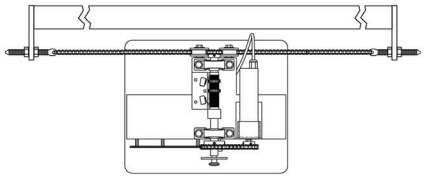

Incorrect Installation

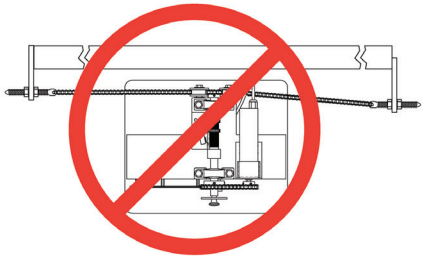

Correct Installation

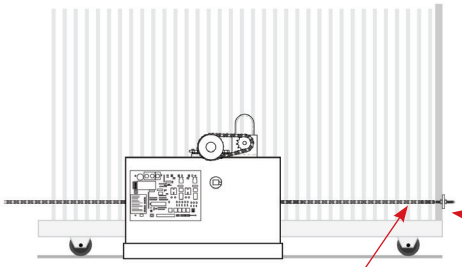

Incorrect Installation

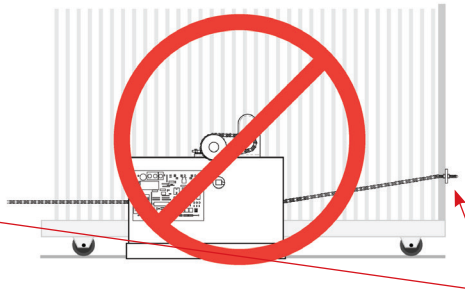

chain will have a few inches of drop across the span of the gate

chain brackets should be in line with idler pulleys

2a Post Mount Installation

POST SPECIFICATIONS

Steel post is an optional mounting method. The operator is designed to handle a 4-inch round or square thick wall post. The operator can be installed directly onto the post or a steel frame can be constructed on the top of post. If the method chosen is to construct a frame see dimensions in pad mount section (page14) for bolt locations and size. If the direct post mount option is chosen, use the dimensions that follow to install. Also consider that additional bracing might be needed.

POST LOCATION TO GATE EDGE AND HOLE PREPARATION

See illustration for operator base overall dimensions.

Post must be parallel to gate edge. Hole depth should be at least 36 inches and bell shaped to reduce operator movement to a minimum. **The post must be concreted in place.**

NOTE: Remember to mount the operator high enough above ground level so that the post and operator can be welded securely.

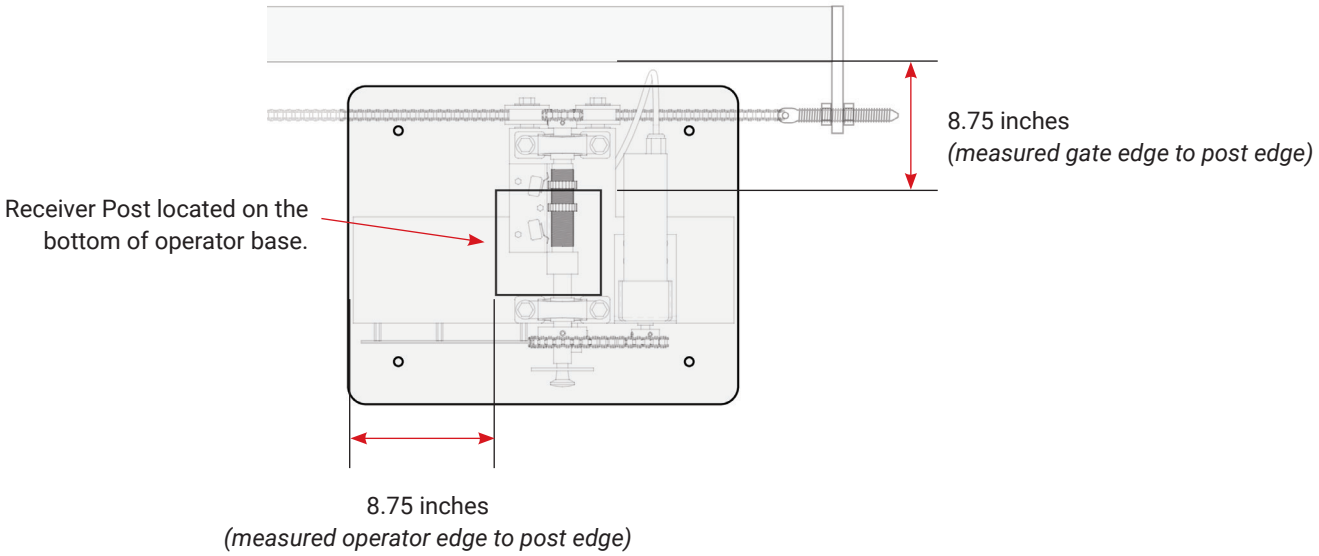

2b Pad Mount Installation

CONCRETE PAD CONSTRUCTION

The mounting foundation must be very stable and of sufficient strength to prevent any movement. Mounting site must be clear of flooding.

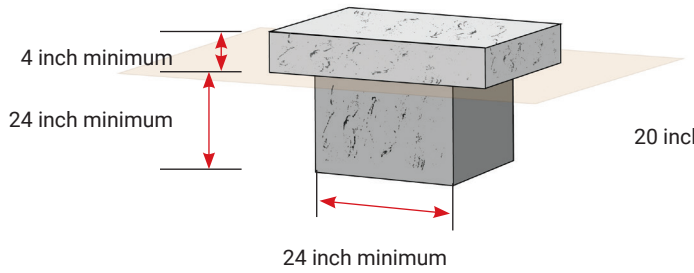

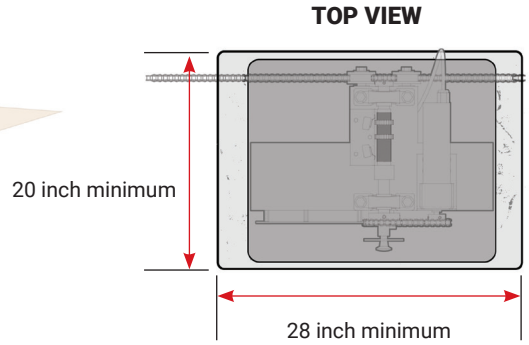

Illustration shown is for dirt surface area. Surface areas of different material may require different pad dimensions. When determining pad location, ensure that the operator's outer edge is a safe distance away from the driveway to avoid damage from traffic.

CONCRETE PAD LOCATION TO GATE

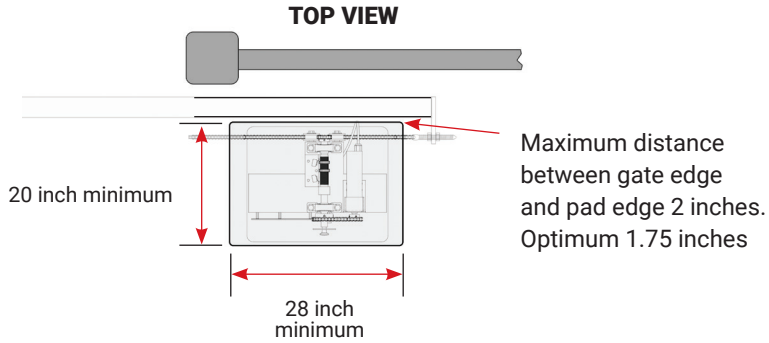

CONCRETE PAD ANCHOR BOLT LOCATION

Concrete pad top view measures 20" x 28". This allows for 4" of concrete between the anchor bolts and the outer edge of the pad. Use the drawing here to locate the four anchor bolts.

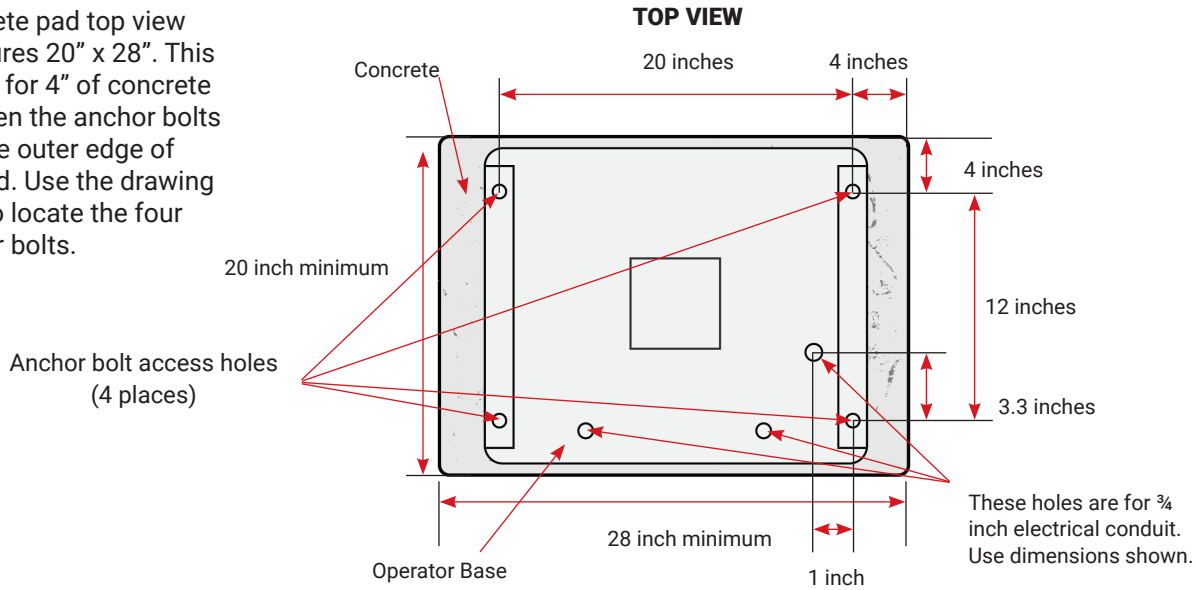

3 Install Chain Brackets to Gate

With the operator securely mounted, use the following procedure to locate and install gate brackets to gate ends.

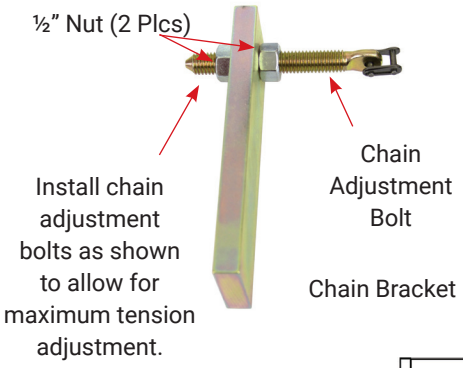

Install the chain adjustment bolt into the chain bracket as shown.

Slide the gate fully open. Using the diagram below locate the correct position for the gate bracket. Clamp the bracket in place and repeat for gate in the fully closed position. Before welding gate brackets in place, refer to page 11 to ensure correct installation. Once alignment is correct, weld chain brackets in place.

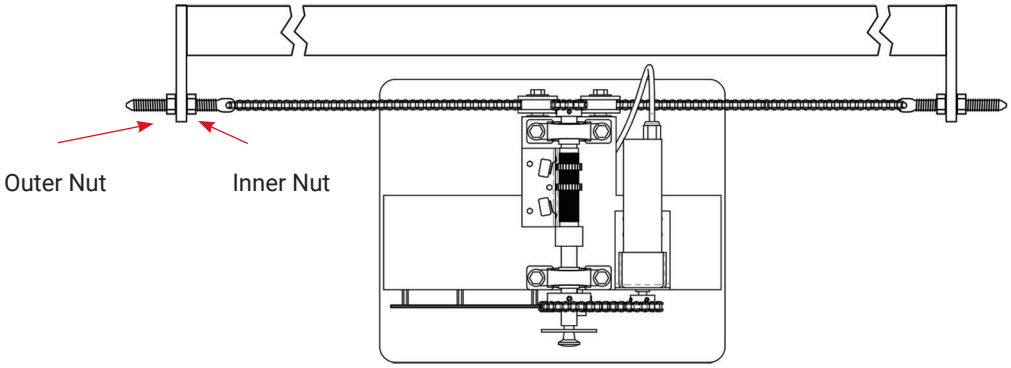

4 Connect Chain

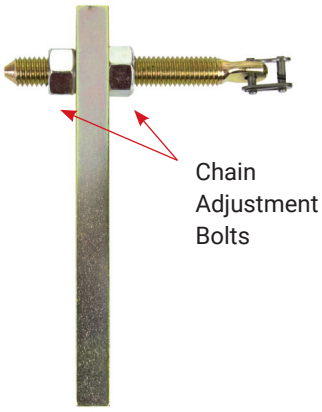

Using the master links supplied connect one end of chain to one of the chain adjustment bolts. Use additional master links to connect chain together as needed to route chain through the operator.

In most installations, the chain will have to be cut to the desired length. To determine the desired chain length, loosen the chain adjustment bolts to allow for maximum adjustment. Pull the emergency release knob to allow the chain to roll freely through the operator. Pull the chain to mate up with the remaining chain adjustment bolt and mark link that needs to be cut. Once link is cut, install master link and connect to chain adjustment bolt.

5 Adjust Chain Tension

The outer ½" nut on the chain adjustment bolt adjusts chain tension. It is important not to over tighten the chain or premature wear will result. Once the chain tension is correct, secure the inner ½ inch nut by tightening it against the chain bracket. The chain should have a few inches of drop across the span of the gate when correct.

6 Install Patriot Control Board

Part # 500026

Remove Patriot Control Board from cardboard package and mount on nylon standoffs. Push lightly at each corner to lock board in place.

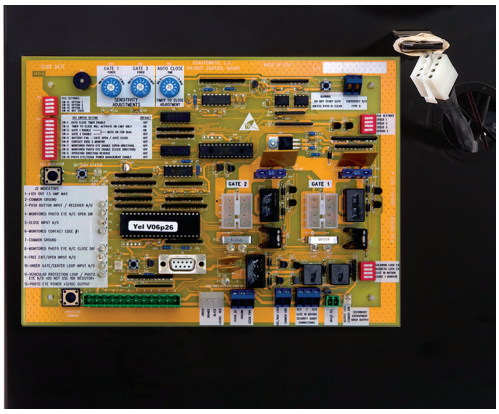

7 Connect Brake Release Cable

IMPORTANT: Cable must be connected before operation.

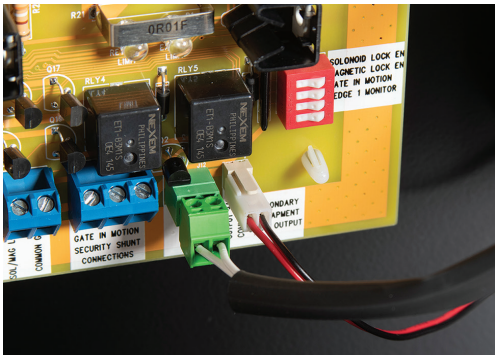

8 Installing Receiver, Battery Controller, and Entrapment Siren

a. Connect the wiring harness to the charge controller.

b. Using the 2 nylon nuts provided, install Charge Controller. Use a ¼" nut driver to secure.

c. Install the receiver on top shelf using the 2 phillips screws provided. Connect antenna to receiver.

d. Plug the receiver cable into the J11 connector on the control board.

e. Connect the Siren power leads to the J4 Terminal.

This siren is also used for low battery notification.

Black - COMMON GND
Red - OUTPUT 12V

Wiring Receiver to J2 Terminal Plug (If Required)
Red - Pin 1 (+12 vdc)
Black - Pin 2 (Ground/Common)
Green - Pin 3 (P1 N/O)
Orange - Pin 9 (P2 N/O)

9 Installing Monitored Entrapment Protection Devices

When the installation requires more than 2 monitored contact edge or 2 monitored photo eyes, the Monitored Entrapment Device Expansion Module must be installed. (USAutomatic Part# 500015)

9a Monitored Photo Eye (Type B1) Installation for Entrapment Protection ONLY. (page 3)

Connect wires per the table below or the drawing on following page.
All wiring should be done with power disconnected from control board.

Installer must determine if the photo eye is being used for gate Open or Close direction protection from entrapment. This must be done to determine where the N/C contact wire is going to be connected. Once known use the chart below or diagram on following page for wiring.

The corresponding dipswitch must also be turned ON.

Closed direction dipswitch DS1 switch 8.

Open direction switch DS1 switch 7.

Photo Eye wiring for Entrapment Device Protection	
Photo Eye Connections	**Patriot Control Board Connections**
Power +12 vdc	J2 pin 12
Power ground / O	J2 pin 2 or pin 7
Common	J2 pin 2 or pin 7
N/C contact Closed Direction	J2 pin 8
N/C contact Open Direction	J2 pin 4

During installation +12 vdc power is required to align the photo eye beam.

Set control board DS1 dipswitches as follows for the installation:

Control Board Dipswitch Settings for Installation	
DS 1 switch 3	OFF – press down on the left hand side
DS 1 switch 4	OFF – press down on the left hand side
DS 1 switch 10	ON – press down on the right hand side

Install the photo eye at this time. Once power is applied to the system, verify alignment. Step 21.

Wiring Photo Eyes to the Control Board

Closed Direction Wiring

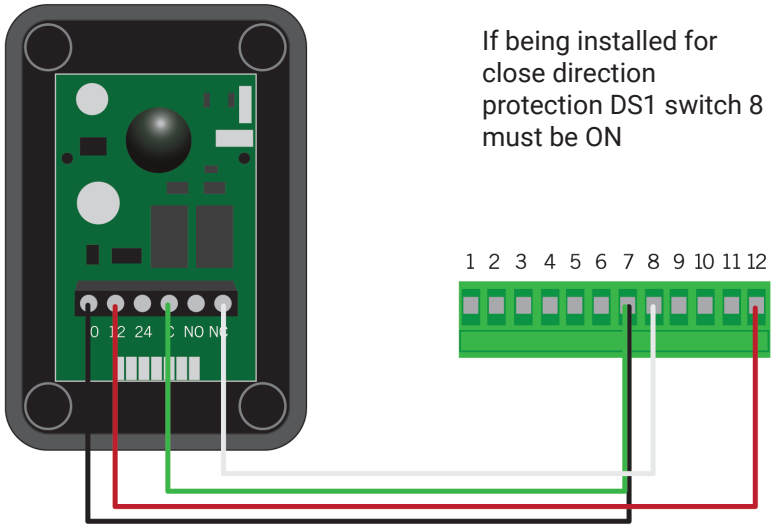

If being installed for close direction protection DS1 switch 8 must be ON

Photo eye “0” connects to J2 green plug pin 7.
Photo Eye “12” connects to J2 pin 12
Photo Eye “C” connects to J2 pin 7
Photo Eye “NC” connects to J2 pin 8

Open Direction Wiring

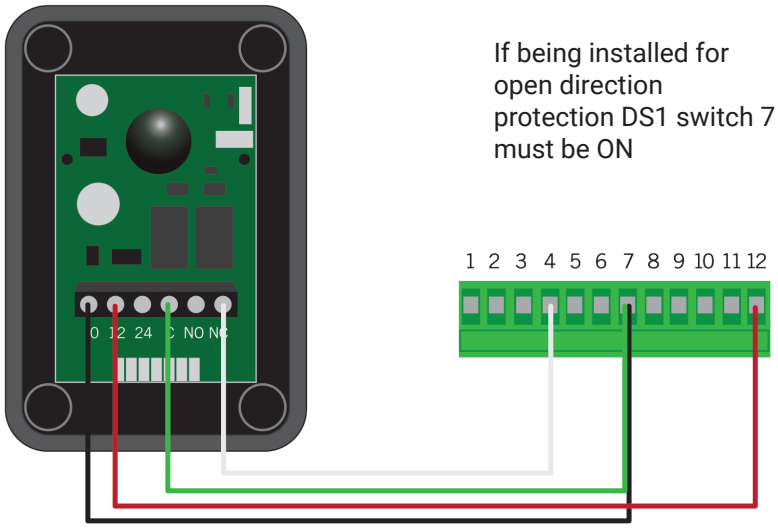

If being installed for open direction protection DS1 switch 7 must be ON

Photo Eye “NC” connects to J2 pin 4

9b Monitored Contact Edge (Type B2) Installation for Entrapment Protection ONLY.

Connect wires per the table below: All wiring should be done with power disconnected from control board. Contact edge must have 8.25K or 10K ohm resistor built into device.

Contact Edge #1 wiring for Entrapment Device Protection	
Contact Edge Connectons	**Patriot Control Board Connections**
N/O connection	J2 pin 6
Common	J2 pin 2 or pin 7
Contact Edge #2 wiring for Entrapment Device Protection	
Contact Edge Connectons	**Patriot Control Board Connections**
N/O connection	J7 pin 3
Common	J7 pin 2 or J2 pin 2 or pin 7

Installing Wireless Contact Edge (Type B2) Receiver

Contact Edge #1 wiring for Entrapment Device Protection	
Contact Edge Connectons	**Patriot Control Board Connections**
N/O connection	J2 pin 6
Common	J2 pin 2 or pin 7
Contact Edge #2 wiring for Entrapment Device Protection	
Contact Edge Connectons	**Patriot Control Board Connections**
N/O connection	J7 pin 3
Common	J7 pin 2 or J2 pin 2 or pin 7

9c Constant Pressure (Type D) Installation

Connect wires per the table below: All wiring should be done with power disconnected from control board. The included warning placard must be installed by the control switch.

Type D wiring for Emergency / Constant pressure Operation	
Constant Pressure Switch N/O type	**Patriot Control Board Connections**
N/O connection	J5 pin 1
Common	J5 pin 2

10 Install Battery

The charge controller harness and the operator wiring harness both must be connected to the battery.

Connect both red wires to the battery positive post.

Connect both the black wires to the battery negative post.

NOTE: DO NOT PLUG WIRE HARNESS INTO CONTROL BOARD AT THIS TIME.

11 Install Battery Controller Power Source (AC or Solar)

The USAutomatic battery controller can be powered by an DC transformer supplied with AC Models OR a solar panel supplied with Solar models. The DC Transformer and the Solar Panel are equipped with a DC plug for easy connection to the battery controller.

11a AC Charged System

The AC model gate operator comes with a DC Adapter (low voltage transformer) which plugs into the battery controller and can easily provide 575 cycles of operation a day without decreasing the battery charge. In the event AC power goes out the operator will operate for weeks on the battery (if cycles per day are below 20) before needing service. Accessories connected to the operator are critical. Always use Solar Friendly accessories to help avoid premature battery failure in cases of power outages.

The unique design of the charging system allows the transformer to be installed away from the gate area if needed. This means that on AC charged systems, the transformer's low voltage wire can be extended avoiding the expense of having an electrician install 120 VAC at the gate area.

NOTE: USAUTOMATIC RECOMMENDS A GROUND FAULT INTERRUPTER (GFCI) RECEPTACLE AND SURGE PROTECTION ON ALL AC CHARGED INSTALLATIONS.

If power source cable needs to be extended to reach the battery controller connections should be made in **customer provided water tight box.** Use charts below to determine wire size needed for the distance to be extended. The cable must be a 2 conductor cable, stranded wire recommended.

DC Adapter or Solar Extension Wire Size Chart	
0 to 100 ft	101 to 250 ft
18 gauge wire	16 gauge wire

The wire should be ran in conduit. The above table lists the recommended wire gauge per application length. Using a smaller gauge may impede performance or cause system to malfunction.

11b Solar Charged System

The solar option allows you to install the gate operator in remote areas or in applications where you prefer to be solar charged. Solar charging provides isolation from lightning that might damage the unit via the AC power needed for the DC Adapter. The use of solar friendly accessories will help prevent premature battery failure.

The Solar model Patriot gate operator comes with a 10 watt solar panel and is designed to provide enough cycles a day for most installations without needing more than one solar panel. Care must be taken to ensure the solar panel has full sun throughout the day; partial sun will give partial results. If no sun is present then a solar system is not practical no matter how many panels might be installed. The solar panel must be kept clean and in full sunlight.

The location of the solar panel is critical for proper battery charging. The panel needs to face a South to Southwest direction and be installed at the angle of the supplied solar panel bracket. For proper operation the panel must have unobstructed sun. Even a small amount of shade will cause the Solar Panel to cease charging. Something as tiny as a fingertip shadow will affect the Solar Panel.

Solar panel may be moved up to 200 feet from the control box to achieve adequate sunlight. See power source cable extension chart Appendix B for proper wire size. For convenience use the USAutomatic 75' Cable Kit Part #520016.

See Region Map below to determine cycles that can be expected. These numbers are based on a basic system with the standard 10 watt solar panel. Adding solar friendly accessories will not have any great affect on the numbers stated. Using other accessories can cause premature battery failure.

GATE CYCLES PER DAY SOLAR CHARGED SYSTEM (10 watt Solar Kit PN #520028)

Patriot RSL	REGION 1	REGION 2	REGION 3
10 Feet Travel Distance	30 cycles per day	45 cycles per day	75 cycles per day
20 Feet Travel Distance	15 cycles per day	23 cycles per day	40 cycles per day
30 Feet Travel Distance	10 cycles per day	15 cycles per day	26 cycles per day

Region 1 covers the area of the country receiving the least amount of solar radiation. On average the amount of charge time is 2.5 hours in region 1, 3.5 hours in region 2 and 5.5 hours in region 3.

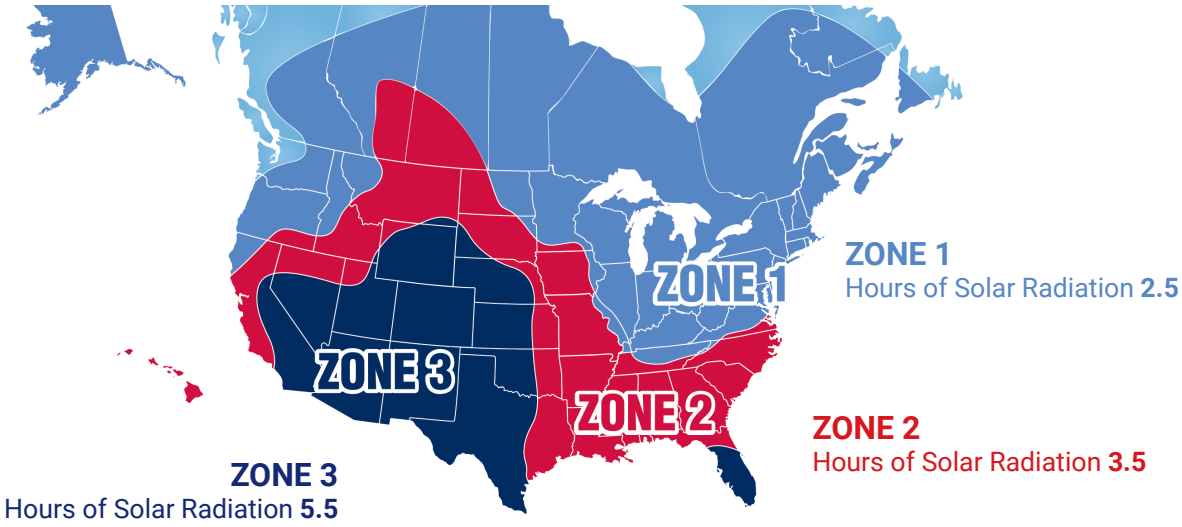

12 Connect Power Source to Battery Controller
(DC Adapter or Solar Panel Kit)

The battery controller accepts inputs from either the DC transformer or the solar panel. The DC Adapter and solar panel come with a DC plug for easy installation. Once the power source is selected and installed connect the DC plug into the battery controller.

Charge Device plugs in here

13 Install Safety Signs

Install the 2 warning placards in the gate area where they are visible from the inside and outside of the gate. These are required per UL 325 to make persons aware of the possible danger of an automated gate.

14 Connect Wire Harness Cable to Control Board

Before connecting the wire harness cable to the control board check the following:

- Verify that all previous steps were performed.
- Verify that the battery connections are correct red lead to positive and black lead to negative.
- Verify that nothing is in the path of the gate. If by chance it begins to move when power is applied, be prepared to disconnect the actuator cable.

The 8 pin plug on the wire harness cable must connect to either the Gate 1 or Gate 2 connector on the control board. Once cable is connected verify that the corresponding control switch for Gate 1 or Gate 2 is turned ON.

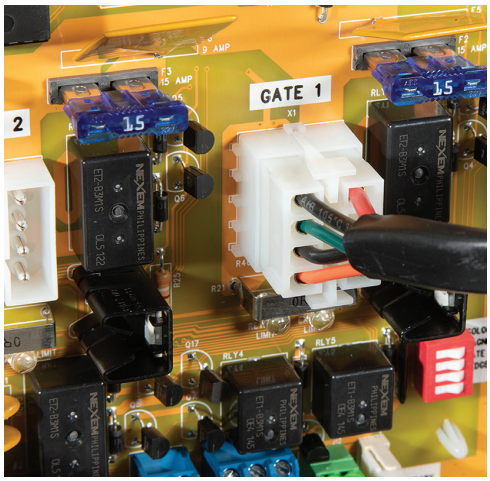

15 Photo Eye Alignment

With power now applied the photo eyes can be aligned, Verify alignment and adjust as necessary. The photo eye has 2 LED's to assist in alignment. However, for optimal peak alignment follow the volt meter test instructions below.

Red LED indicates power is applied and beam is not in alignment.

Green LED means beam is aligned.

The TP + and TP - test points located on the photo eye can be used to ensure optimal alignment. Using a DC voltmeter connect leads to the TP - and + and adjust alignment for a DC voltage reading of 4.5 to 5 vdc to ensure optimal alignment.

16 Operating Gate for the First time

Before operating the gate for the first time please verify the following items:

1. Pull manual release knob and slide the gate to the mid travel position. Be careful not to allow limit nuts to travel beyond the limit switch levers or damage to the switches may occur.

2. Adjust the limit cam nuts so that they are within 1 inch of the limit switches (see diagram). To adjust the cam nuts, press down on the limit plate assembly. This will release the limit plate from the cam nuts and allow the cams to turn on the threaded shaft.

3. Re-engage the manual release knob by pushing it inward and slowly rolling the gate until the knob slides into place.

4. Verify the brake release cable is connected to the board.

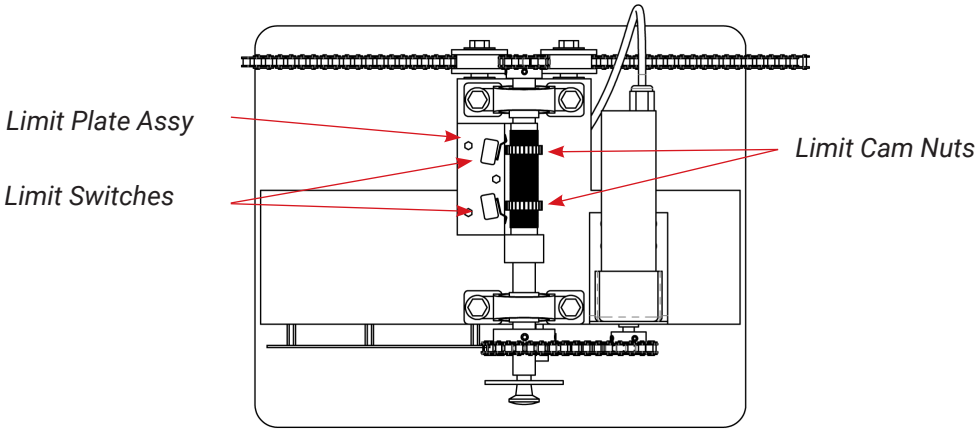

NOTE: This check must be performed before operating the gate for the first time. Failure to do so may damage the gate operator.

Before operating the gate make sure the Patriot RSL control board dipswitches are set correctly for your installation. Locate the dipswitches on the Patriot RSL control board.

Factory default dipswitch settings are 2 and 3 on.

ON - Down on right

OFF - Down on left

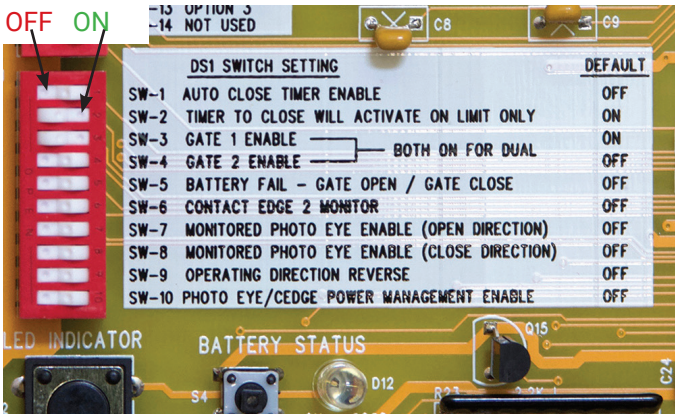

Identify your installation as a Right Hand or Left Hand installation (see page 10 for images). Verify the standard dipswitch settings for the proper hand on the chart below.

			Closed Direction Monitored Photo Eye	Open Direction Monitored Photo Eye	W/ Monitored Contact Edge
PATRIOT I	Right Hand	Dipswitches 2, 3 should be in the ON position	DS1 switch 8 and 10 ON	DS1 switch 7 and 10 ON	DS2 switch 4 ON
PATRIOT I	Left Hand	Dipswitches 2, 3, 9 should be in the ON position	DS1 switch 8 and 10 ON	DS1 switch 7 and 10 ON	DS2 switch 4 ON

17 Limit Switch Final Adjustment

1. **Locate the Open/Close command button on the Patriot control board.** This button will start the gate when pressed once, pressing it again will stop the gate.

2. **Press the Open/Close command button.** The gate should begin to open. Allow the gate to travel to open stop position. If the gate travels in the close direction on the first command then check the position of DS1 switch 9. It should be off for Right Hand or on for Left Hand. (see chart on previous page)

3. **Press the Open/Close command button again.** The gate should begin to close. Allow gate to travel to the close stop position.

4. **At this time adjust open and close limit cams to allow gate to fully open and close.**
   The limit switch adjustments are located on the top shelf of the operator. To adjust limits, press down on the limit plate assembly. This will release the limit plate from the limit adjustment cams and allow the cams to turn. Turn the limit adjustment cam which corresponds to the direction you want to adjust.

5. **Always adjust limit cam nut in mid travel position to avoid damaging limit switches.**

NOTE: WHEN THE LIMIT ADJUSTMENT CAM DEPRESSES THE LIMIT SWITCH ACTUATOR THE GATE WILL STOP.

DO NOT ADJUST THE LIMIT CAM NUTS PAST THE LIMIT SWITCH ACTUATOR ARM. THIS MAY RESULT IN DAMAGE TO THE LIMIT SWITCH. ENSURE THE LIMIT PLATE ASSEMBLY SNAPS INTO THE GROOVES ON THE LIMIT CAM NUTS PRIOR TO RESUMING OPERATION.

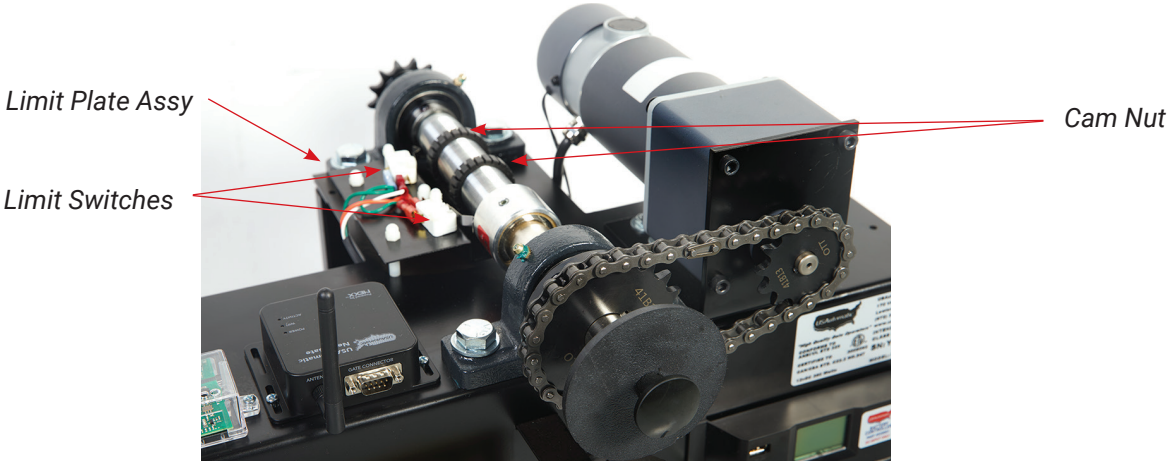

18 PWM Adaptive Soft Start / Stop Speed Control Adjustment

The control board is equipped with adaptive adjustable PWM soft start / stop speed control.

The factory preset speed is set at a value of 4. Depending on the installation a different speed setting might be needed.

DS4 dip switches 1 - 3 control the soft start / stop speed.

The speed may be adjusted from a setting of 0 -7. Each of the 3 switches represent a binary value and the switches turned ON add together for a speed setting.

switch 1 - value = 1 **switch 2 - value = 2** **switch 3 - value = 4**

Looking at the picture you see the default speed value is set at 4 (DS4 switch 3 is ON)

If all 3 switches were turned OFF the value would = 0 (max speed)

If switch 1 and 3 were turned ON the value would = 5

If switch 2 and 3 were turned ON the value would = 6

If switch 1, 2, 3 were turned ON the value would = 7 (slowest speed)

The higher the value the slower the speed.

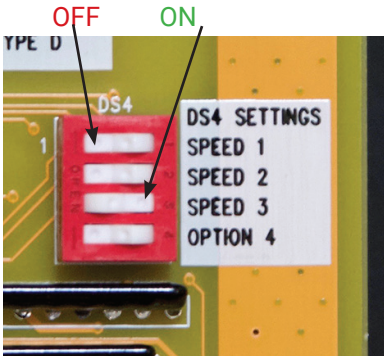

Avoid setting the speed value to a very slow speed, which would cause the motor to stall.

After speed value is changed wait 5 seconds before operating to allow new setting to be stored. The adaptive circuit will adjust the soft start / stop speed gradually to ensure proper gate operation based on the speed value selected.

DS4 DIP SWITCHES

Switch		Setting	Factory Settings are shown in bold type
1	Soft Start / Stop Speed Control Value 1	ON	Speed value of 1 added
		OFF	**No speed value added**
2	Soft Start / Stop Speed Control Value 2	ON	Speed value of 2 added
		OFF	**No speed value added**
3	Soft Start / Stop Speed Control Value 4	**ON**	**Speed value of 4 added**
		OFF	No speed value added
4	*Option 4*	ON	NA
		OFF	**NA**

This page intentionally left blank.

19 Sensitivity Adjustment and Entrapment Alarm and Auto Close Setting

The Patriot control board has 2 sensitivity adjustment dials located in the upper left corner of the control board. These adjustments control the amount of current the control board will allow the motor to draw from the battery to operate your gate. Minimum force is the least amount of current allowed. This circuit is inactive for the first second of gate operation.

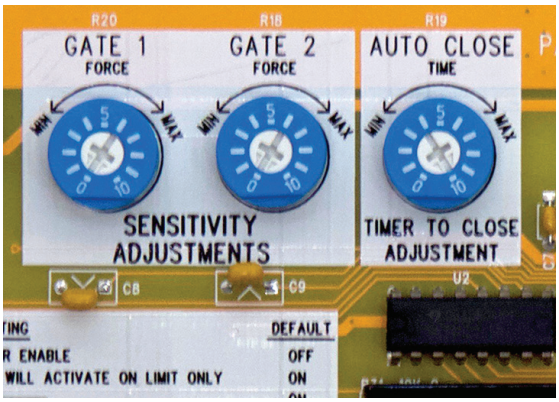

A typical adjustment setting is between 4 to 7 on the adjustment dial. If a setting above 8 is required for proper operation without just cause, you should check the gate, gate rollers, or for possible debris in track.

Both sensitivity settings should be individually adjusted on dual gate systems. On single gate systems, adjust the setting for the actuator plug being utilized (Gate 1 or Gate 2) and then match the setting on the other sensitivity adjustment.

Entrapment alarm:
The entrapment alarm installed gives an audible alert whenever the gate sensitivity feature is activated twice before gate reaches an open or close limit. See chart step 19 for operation.

Auto Close Setting:
Important: Auto close should not be utilized unless safety devices are installed to prevent automatic operation in case an object is in the path of the gate.

The adjustment dial controls the auto close time from approximately 2 seconds to 200 seconds. A setting of 0 will be the fastest auto close time.

20 Verifying Inherent Entrapment Protection System (Type A) Operation:

Once the gate operator is installed use the table below to determine correct operation.

It is recommended that the current sensitivity adjustment for the gate being tested be set at a setting no greater than 5 for this test.

Gate Opening - Gate is stopped by an object after 1 second of operation	Gate Closing - Gate is stopped first time by an object after 1 second of operation
• Gate stops and reverses for ~ 2 seconds. • Auto close if turned ON is disabled. • Requires a Push Button, Close, Open or Reset input before normal operation resumes.	• Gate stops and reverses to full open. • Auto close if turned ON is disabled. • Requires a Push Button, Close, Open or Reset input before normal operation resumes.
Gate Closing after above obstruction – If Gate is stopped a second Time Before Reaching the Close Limit	**Gate Opening after above obstruction – If Gate is stopped a second Time Before Reaching the Open Limit**
• Gate stops. • Alarm sounds for 5 minutes until Reset is pressed. • Requires a Reset input before normal operation resumes.	• Gate stops. • Alarm sounds for 5 minutes until Reset is pressed. • Requires a Reset input before normal operation resumes.

21a Verifying Monitored Photo Eye (Type B1) Entrapment device Operation Only:

Operate the gate and verify entrapment protection devices are working properly.
Use the table below to determine correct operation.

Type B1 - Photo Eye 2nd Entrapment - N/C input J2 pin 4 - Open Direction If DS1 switch 7 is OFF this input is ignored. If ON, functions as described below	**Type B1 - Photo Eye 2nd Entrapment - N/C input J2 pin 8 - Closed Direction** If DS1 switch 8 is OFF this input is ignored. If ON, functions as described below
Gate Opening Photo Eye Activated	**Gate Closing Photo Eye Activated**
Gate stops	Gate stops and reverses to full open
Auto close if turned ON is still active	Auto close if turned ON is still active
Return to normal operation when the sensor is no longer activated.	Return to normal operation when the sensor is no longer activated.

21b Verifying Monitored Contact Edge (Type B2) Entrapment device Operation Only:

Contact Edge (Type B2) Monitored Entrapment N/O input J2 pin 6 If DS2 switch 4 is OFF then gate will not move. If ON, functions as described below.	
Gate Opening Edge Activated 1st time	**Gate Closing Contact Edge Activated 1st Time**
Gate stops and reverses for ~ 2 seconds	Gate stops and reverses to full open
Auto close disabled	Auto close if turned ON is not active
Requires a Push Button, Close or Open input before normal operation resumes.	**If while opening after reversal above, a 2nd sequential input is received, gate must stop**
If while closing after reversal above a 2nd activation occurs before the 2 seconds then	Requires a Push Button, Close or Open input before normal operation resumes.
Gate stops	**Gate Closing Edge Activated 2nd Time before the close limit then**
Auto close disabled	Gate stops
Requires a Push Button, Close or Open input before normal operation resumes.	Auto close disabled
	Requires a Push Button, Close or Open input before normal operation resumes.

21c Verifying Constant Pressure (Type D) Operation Only:

MPORTANT: Verify the gate path is clear before pressing the S4 button.

The S4 push Button (N/O) requires constant pressure to operate gate. When pressed and held the gate will run until the limit is reached or the button is released. If the button is released in mid travel the gate will stop and the next press of the button will run the gate in the opposite direction.

IF gate is closed and emergency switch is activated the gate will open and remain open until deactivated.

22 Programming Transmitter and Receiver

Operating frequency 433.92 MHz.
Receiver can store up to 42 unique transmitter dipswitch code settings.

1. Transmitter Setup:

(It is recommended that the dipswitch code be changed from the default factory setting)

1. Open the battery compartment door and locate the dipswitches.
2. Change the dipswitches to the settings you prefer, record for future reference in the table below.

Switch Position	Switch 1	Switch 2	Switch 3	Switch 4	Switch 5	Switch 6	Switch 7	Switch 8	Switch 9
+									
0									
-									

Transmitter Left Button to Receiver Programming: *(standard Open/Stop/Close function)*

1. Press and hold the left transmitter button down. Red light on transmitter should be on.
2. On the receiver, push the P1 push-button until the green LD light comes on.
3. Release both buttons. Transmitter left button to receiver programming is complete.

2. Programming Transmitter Right Button to Hold-Gate-Open:

(Only if auto close timer is enabled)

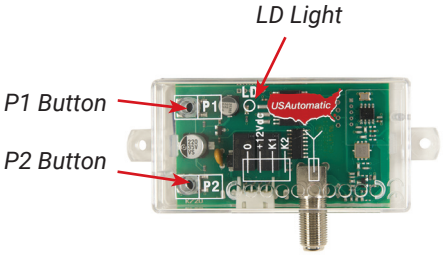

1. The 2-channel receiver allows for programming the P2 relay from momentary mode (default) to latching mode. Transmitter right button can be programmed to hold gate open, over-riding the auto-close feature if activated.
2. Press and hold the right transmitter button down. Red light on transmitter should be on.
3. Press the P2 push-button until the green LD light comes on.
4. Release both buttons. Transmitter right button to receiver programming is complete.
5. Press the P2 push-button until the green LD light comes on, then release. Green LD light should be steady. If flashing latch mode is already set.
6. If not flashing release P2 immediately and press P1 once.
7. Green LD light should be flashing. Latching mode is set.

Verifying Receiver P2 relay is programmed to latching mode:

1. Press the P2 push-button until the green LD light comes on, then release.
2. Green LD light should be flashing. If green LD light is steady, redo the Receiver Programming section above.

Resetting receiver P2 relay to momentary mode:

1. Press the P2 push-button until the green LD light comes on, then release. Green LD light should be flashing.
2. While the LD light is flashing, push the P1 push-button down and release. Green LD light should be steady. Momentary mode is set.

Erasing Single Transmitter from Receiver Memory:

The dipswitch settings of the transmitter to be deleted must be known. If known follow the steps below.

1. Set the dipswitches in a transmitter to match the switch settings of the transmitter code to delete.
2. Press and hold the left transmitter button.
3. On the receiver, push the P1 push-button until the green LD light comes on. Then release both.
4. Press and hold the right transmitter button.
5. On the receiver, push the P2 push-button until the green LD light comes on. Then release both.
6. Transmitter is now erased from receiver memory.

Erasing all Transmitters from Receiver Memory:

1. Press the P2 button on the receiver until the green LD light comes on. Then release P2 button.
2. While LD light is on press the P1 and P2 buttons simultaneously and hold until the green LD light begins to blink slowly. It should blink 4 times then all transmitter codes are erased.

23 Install Emergency Release Access Cover

Install Emergency release access cover as shown here.

Install cover and secure in place using the 4 provided 1/4 inch bolts and washers.

Slide locking bar through slot in front cover.

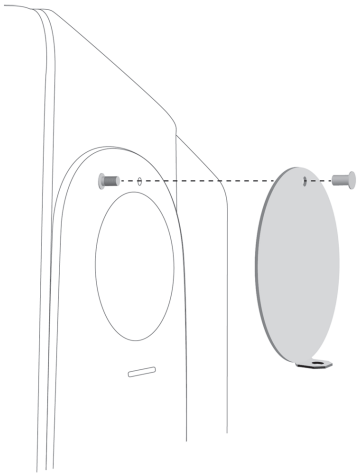

Patriot RSL Control Board Information

Patriot RSL Control Board (Part #500026)

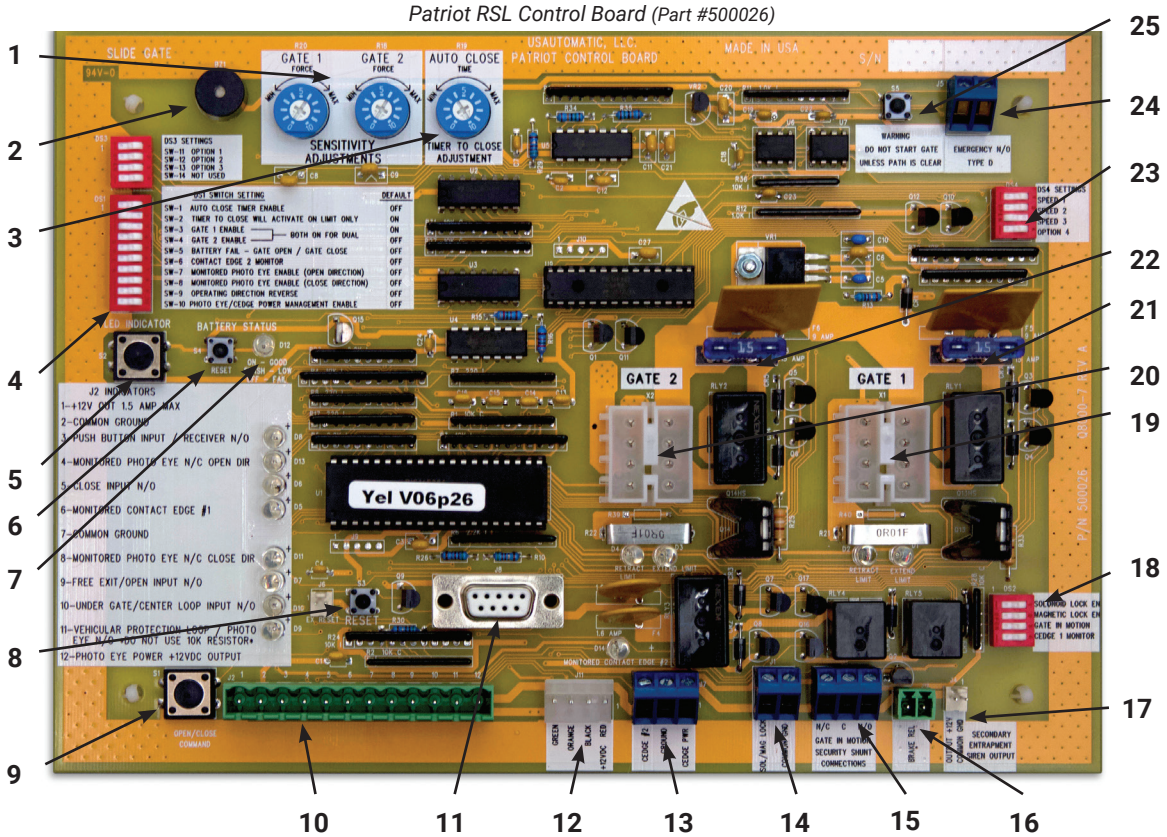

1	*Sensitivity Adjustments*	14	*J1 Solenoid Lock / Mag Lock Output*
2	*Sensitivity Siren*	15	*J3 Gate N Motion / Security Shunt*
3	*Timer to Close Delay Adjustment*	16	*Brake Release*
4	*DS1 Dip Switches*	17	*J4 Entrapment Siren*
5	*LED Indicator Button*	18	*DS2 Function Dip Switches*
6	*S4 Battery Reset button*	19	*Gate 1 Plug*
7	*Battery Status LED*	20	*Gate 2 Plug*
8	*S3 System Reset*	21	*15 Amp Fuse Gate 1*
9	*S1 Open/Close Button*	22	*15 Amp Fuse Gate 2*
10	*J2 Terminal*	23	*DS4 Dip Switches - Speed Control*
11	*J8 App Plug*	24	*Emergency Type D Terminal*
12	*J11 LCR receiver Plug*	25	*S5 Type D button*
13	*J7 - Contact Edge #2. Monitored Entrapment and Wireless Edge 12v power*		

J2 Terminal Description

The accessory connector is a plug which can be removed from the control board for ease of wiring and troubleshooting purposes.

Place finger below connector and pull out to remove.

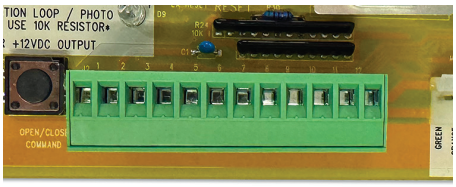

J2 Terminal

Terminal	
1	+12 vdc Output *(Maximum current output 1.5 amp - 1500 milliamps)*
2	Common Ground Input
3	Push Button Input *(normally open contacts)* *(Push button, radio control, keypad, etc.)*
4	PhotoEye Open Direction N/C Input *DS1 Switch 7 must be on. No 10K resistor.*
5	Close Input *(normally open contacts)*
6	Contact Edge #1 N/O connection monitored entrapment *DS2 switch 4 must be ON when monitored edge is connected*
7	Common Ground Input
8	PhotoEye Closed Direction N/C Input *DS1 Switch 8 must be on. No 10K resistor.*
9	Free Exit / Open Input *(normally open contacts)* *Loop input or any hold open input such as a 7-day timer, telephone access unit, or maintain contact switch (normally open contacts). These devices open the gate and will prevent the gate from closing if the contact is maintained. Once the contacts have been released, the gate can be closed with a closed signal device or the automatic close timer feature. Receiver relay2 pre-wired for latching open.*
10	Center Loop or Under Gate Loop Input *(normally open contacts)*
11	Safety Loop / Photo-eye / Reversing Edge Input used for vehicular protection devices. *(normally open contacts) *NO 10K DEVICES*
12	Photo Eye Power +12 vdc output 1 amp max current *Only present when DS1 switch 10 is ON and gate is moving or DS1 switch 3 and 4 are OFF and DS1 switch 10 is ON used for installation.*

DS1 Function Dip Switches

ON - Down on right

OFF - Down on left

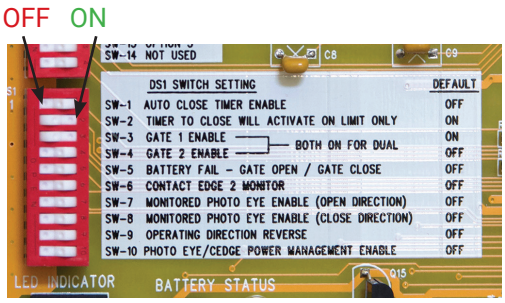

Switch		Setting	Factory Settings are shown in bold type
1	Automatic Close Timer Enable *(Not recommended unless safety devices are installed)*	ON	Timer to close is activated
		OFF	**Timer to close is disabled**
2	Timer to Close Function	**ON**	**Timer to close activates only if open limit is activated**
		OFF	Timer to close works from any point the gate is stopped
3	Gate 1 Enable	**ON**	**Gate 1 operator enabled to function**
		OFF	Gate 1 operator disabled
4	Gate 2 Enable *(both gates on for dual)*	ON	Gate 2 operator enabled to function
		OFF	**Gate 2 operator disabled**
5	Battery Fail *If battery voltage falls below 10vdc durring a gate cycle the gate will travel to the selected position and shut down.*	ON	Gate shuts down in Closed Position
		OFF	**Gate shuts down in open position**
6	*Contact Edge # 2 Monitor Must be On if monitored contact edge is wired to J7 pin3*	ON	Monitored contact edge is installed J7 pin 3. Contact Edge must have 8.25K or 10K resistor.
		OFF	**No monitored contact edge installed**
7	Photo Eye Open Only N/C Monitored Entrapment	ON	Monitor Photo Eye open direction only
		OFF	**No monitored Photo Eye open direction installed**
8	Photo Eye Closed Only N/C Monitored Entrapment	ON	Monitor Photo Eye closed direction only
		OFF	**No monitored Photo Eye closed direction installed**
9	Operating Direction Reverse *(Must be on for left hand installations to operate correctly)*	ON	Left Hand Installation
		OFF	Right Hand Installation
10	Photo Eye / Contact Edge Power Management Enable **when ON 12 vdc will be present at J2 pin 12 whenever gate is in motion.*	ON	Enables PEPM
		OFF	**Disables PEPM**

DS2 Function Dip Switches

ON - Down on right

OFF - Down on left

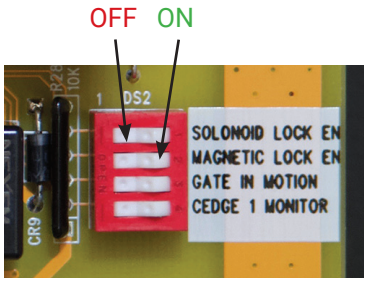

DS2 Switches

Switch		Setting	Factory Settings are shown in bold type
1	Solenoid Lock Enable / Gate in Operation Indicator / Gate Leaf Delay	ON	Solenoid lock output energizes half second before gate begins to move and releases 3 seconds after the gate begins to move.
		OFF	**Solenoid lock is inactive**
2	Magnetic Lock Enable	ON	Magnetic lock output energizes on Close Limit and releases half second before gate begins to open. *(Energizes = +12 vdc output 1.5 amp max)*
		OFF	**Magnetic lock output is inactive**
3	Gate N Motion / Security Shunt Circuit / Open Gate Indicator	ON	Security shunt circuit relay is active (closed circuit) (wire in parallel) Relay activates half second before gate begins to open and stays activated until 4 seconds after gate reaches a closed limit
		OFF	**Security shunt circuit relay is inactive (open circuit)**
4	*Contact Edge #1 Monitor (must be ON if monitored contact edge is installed at J2 pin 6)*	ON	Monitored contact edge is installed J2 pin 6 Contact Edge must have 8.25K or 10K resistor.
		OFF	**No monitored contact edge installed**

DS3 Function Dip Switches

These switches are for future options and are not curremtly used. Leave all 4 switches in the OFF position.

Programming Your Wireless Keypad

050500
(plastic)

PUK code

_____

050551
(premium metal)

PUK code

_____

Terms to Understand

Access Code – The 2 to 5-digit code used to open the gate (24 unique codes are possible). If access code is less than 5 digits it requires the # sign after code is entered. Example: "2 #." If code is 5 digits the # sign is not required. Metal keypad uses A or B.
ACCESS CODE CAN NOT BE THE SAME AS THE MASTER PASSWORD.

Master Password – The 5-digit code used to access programming features. Factory default is "11111". This should be changed for security reasons.
NOT USED TO OPEN GATE AND CAN NOT BE THE SAME AS THE ACCESS CODE.

Relay 1 – The receiver has 2 relays. P1 (relay 1) is pre-wired to the J2 connector - pin 3.

Relay 2 – The receiver has 2 relays. P2 (relay 2) is pre-wired to the J2 connector - pin 9.

Keypad Security Code (Dip Switch Code) – This code makes your keypad unique to your installation. Keypad does not have dip switches like the transmitter; instead it has virtual dip switches which must be programmed.

PUK Code – "Password Unblocking Key." The PUK code is located inside the keypad and is needed when the master password has been lost. Record in space above for future reference. Must be 5 digits long.

" * " or "A" Key – located on the keypad is used to cancel last command entered.

Red Light Blinks – When blinking, the keypad is sending a signal to the receiver. Valid access code was entered. This is the Blue 5 key on the metal keypad.

NOTE: Do not install keypad until "Create Communication with Receiver P1 (relay 1)" has been completed.

Keypad Programming

Create Access Code: *(Code you use to operate the gate)*
***CAN NOT BE THE SAME AS THE MASTER PASSWORD!**

1. Enter the Master Password "11111". (this is the factory default master password).
2. Enter "9" If correct, 2 short beeps (if 1 long beep is heard, start over with step 1).
3. Enter the new Access Code (up to 5 digits), if less than 5 digits, "# or B" key is required.
4. Enter "9"
5. Enter the new Access Code again to verify.
6. Enter "1". If this access code is for P1 (relay 1) Enter "2" if this access code is for P2 (relay 2).
7. If correct, 2 short beeps (if 1 long beep is heard, start over with step 1).
8. Continue with "Create Communication with Receiver" to complete programming.

NOTE: *Step 6 above allows you to select a unique frequency (1, 2, 3, 4) for the access code you are creating. Keypad can be programmed with 4 different access codes each having a unique frequency. This is used when multiple gates are within range of the keypad. Create an access code using 1 in step 6 for one gate. Create an access code using 2 in step 6 for the second gate. This allows one keypad programmed with 2 access codes to operate 2 different gates within range or two keypads can be installed on 2 different gates without interfering with each other. If 4 gates were involved then 3 and 4 could be used in step 6. Also used to create a unique access code to activate the hold open feature offered with P2 (relay 2).*

Create Communication with Receiver: *for P1 (relay 1) access code:

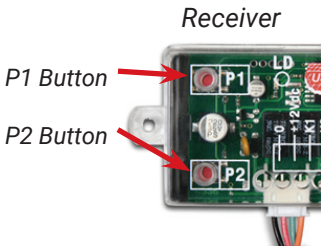

1. Carry keypad to receiver location for programming.
2. Enter Access Code for P1 (relay 1) on the keypad and continue to press the last key entered (red light blinks).
3. Press P1 (learn button) on the receiver until LD (green light) comes on and relay clicks.

Create Communication with Receiver: *for P2 (relay 2) access code:

1. Carry keypad to receiver location for programming.
2. Enter Access Code for P2 (relay 2) on the keypad and continue to press the last key entered (red light blinks).
3. Press P2 (learn button) on the receiver until LD (green light) comes on and relay clicks.

Programming New Master Password: Once created record here for reference _____

NOTE: The Master Password is NOT an access code. This is a MASTER programming code used to access the programming of the keypad. It is not used to operate the gate.

1. Enter the Master Password “11111”.
2. Enter “8” If correct, 2 short beeps (if 1 long beep is heard, start over with step 1).
3. Enter the Master Password (up to 5 digits), if less than 5 digits, “# or B” is required.
4. Enter “8”
5. Enter the Master Password again to verify.
6. Press “8” If correct, 2 short beeps - New Master Password is set (If 1 long beep is heard, start over with step 1).

Programming Master Password Back to Factory Default: (11111)

1. Enter “11111”.
2. Press “8” (long beep).
3. Enter PUK code. (PUK must be 5 digits).
4. Press “8”.
5. Enter PUK code to confirm.
6. Press “8” (2 beeps) Master password reset complete.

Deleting Single Access Code:

1. Enter the Master Password.
2. Press the “7” key. If correct, 2 short beeps *(if 1 long beep is heard, start over with step 1)*.
3. Enter the Access Code to be deleted.
4. Press the “7” key.
5. Reenter the Access Code to be deleted.
6. Press the “7” key. If correct, 2 short beeps *(if 1 long beep is heard, start over with step 1)*.

Deleting All Access Codes:

1. Enter the Master Password.
2. Press the “7” key. If correct, 2 short beeps *(if 1 long beep is heard, start over with step 1)*.
3. Reenter the Master Password.
4. Press the “7” key.
5. Reenter the Master Password.
6. Press the “7” key. If correct, 2 short beeps *(if 1 long beep is heard, start over with step 1)*.

Changing Keypad Security Code:

This keypad has a virtual dipswitch used to create your Security Code. The virtual dipswitch contains nine 3-position switches. To ensure neighboring keypads do not interfere with each other, the virtual switches should be positioned in a random pattern, using the following procedure.

Example of random positioning of the virtual dipswitches to create a Security Code is shown below. To enter the Security Code, enter the dipswitch number, followed by the dipswitch position character.

The Security Code would be entered as: 1# 20 3* 4* 5# 6* 7# 80 9*

Dipswitch Position	Switch 1	Switch 2	Switch 3	Switch 4	Switch 5	Switch 6	Switch 7	Switch 8	Switch 9
# or B	X				X		X		
0		X						X	
* or A			X	X		X			X

Use table below to create your random security code and follow steps below to program your keypad.

Dipswitch Position	Switch 1	Switch 2	Switch 3	Switch 4	Switch 5	Switch 6	Switch 7	Switch 8	Switch 9
# or B									
0									
* or A									

1. Enter the Master Password.
2. Enter “6” If correct, 2 short beeps (if 1 long beep is heard, start over with step 1).
3. Enter the Security Code created in the previous table. If correct, 2 short beeps after each switch number and switch position combination is entered.
4. Enter “# or B”
5. Enter “6”
6. If correct, 2 short beeps (if 1 long beep is heard, start over with step 1).

USAutomatic Battery Controller

Battery controller is designed to charge 12 vdc batteries of various types using either solar panel or DC transformer part # 520009. It also capable of charging 24 vdc battery if using a 24-volt solar panel. The package includes Power source input adapter plug.

Recommend battery types: SLA (Sealed Lead Acid), FLD (Flooded Lead Acid), GEL and AGM are all ideal choices. We do not recommend using Lithium-ion batteries with this controller.

Controller Features		
12 / 24 vdc battery detection	Charge current reading active	PWM charging mode
Battery reverse connection protection	Battery voltage reading active	USB power outlet
LCD display	Battery reverse discharge protection	Plug N Go connections
Controller Specifications		
10-amp solar charger	6.2 in x 2.9 in x 1.06 in	Weight 4.2 oz
DC adapter 20vdc @ 1.2 amps max	Float charging 13.8 / 27.6 vdc	Max solar panel 130 watts
Self-consumption < 9ma	USB max current 1.5 amps	Automatic cutoff under 10.8 vdc

Installation

The controller is fully automatic for easy and quick installation.

1. Connect battery to the controller.
2. Controller LCD screen will display current battery voltage.
3. Connect Power Source to controller (solar panel or DC transformer)

Power Source Inputs:
1. DC power plug 2.5mm
2. Direct wire leads 14-18 gauge

Battery Connections:
1. Anderson Power Plug

Operation

- Charging Indication Symbol when steady indicates that the power source is charging the battery.
- No symbol indicates power source is not supplying enough energy to charge.
- No symbol indicates power source polarity is reversed, verify power source polarity.

**If the symbol is flashing, the battery is fully charged and has entered float charging state.*

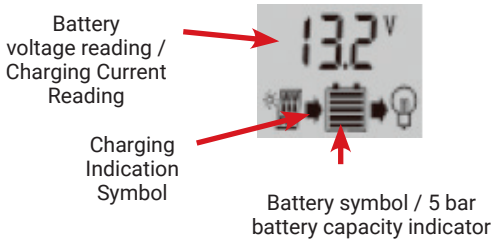

Diagnostics

1. Controller LCD screen is blank:
   A. Battery voltage below cutoff voltage. Load test battery replace or charge as necessary.
   B. Reverse battery connection indication. Verify battery polarity connection to controller.
2. Battery symbol is flashing – indicates the battery voltage exceeds the rated input voltage of the charger. Disconnect the external battery charger from battery or choose appropriate battery.
3. E11, E12, E13 displayed – Battery needs to be removed, charged and load tested.

Warning

Risk of explosion! Never install the controller in a sealed enclosure with flooded batteries.

PERIODIC SERVICE

All gate operators require periodic checking and adjustments of the control mechanism for force (load), speed and sensitivity. These checks should be made by a qualified technician to verify proper adjustment and operation of all safety related components including those mentioned above.

All accessories and monitored safety devices must be checked. Monitored entrapment protection devices need to be checked at least once a month for proper operation.

Periodic checking is also advised for the following:

1. Battery terminals for corrosion.
2. Check Wheels and Gate Rollers for wear - grease if necessary.
3. Mounting bolts and sprocket set screws for correct tightness.
4. Inspect weld points for cracks or other defects.
5. Inspect wiring for cuts, nicks or other defects.
6. Inspect drive chain and sprockets for tension and wear. Adjust or replace as necessary.
7. As needed use chain lube to keep chain properly maintained.
8. Verify proper operation of charging system, refer to charge controller operation check.
9. Verify monthly that the inside of the operator remains clean and free of insects. **Do not spray control board with bug spray or oil based products.**

Emergency Manual Release

Remove lock and rotate emergency manual release cover to the up position.

Pull manual release knob out (about ¾ inch)

Once knob has been pulled, the gate can then be pushed by hand.

If knob cannot be pulled, the gate may need to be agitated left or right.

To reset the knob, push in on knob and roll gate until knob snaps in place. It may be necessary to tap the knob inward to fully lock in place.

WARNING: Only insert hand into access hole as far as needed to grip the release knob. Trying to insert hand farther can result in injury.

USAutomatic Gate App Module

Part Number 030223

- Open/close gate operator
- Remote control via USAutomatic Gate App
- Works with Alexa and Google Assistant enabled devices
- Best-in-class encryption technology
- Compatible with USAutomatic Gate Operators

CP-4 Free Exit Device (Solar friendly device)

Part Number 070305

The driveway exit sensor is a magnetic device that installs below ground beside the drive. A magnetic field is established which when interrupted by a moving metal object will send a signal to open the gate. This sensor is supplied with 100 foot of cable and is typically installed inside the property beside the drive to automatically open the gate when a car passes. This type of sensor is not a safety device.

LCR Wireless Push to Operate Button

Part Number 030215

The Push to Operate transmitter is designed for indoor or outdoor wireless installation. Install to allow operation of the gate by simply pressing the pad. The button is a pressure sensitive pad. Press the pad and an audible tone is generated. Programming is identical to transmitter programming. Installation hardware is included. Compatible with all USAutomatic receivers.

LCR 2 Button or 4 Button Basic Transmitter

2 Button Part Number 030210
4 Button Part Number 030212

- Standard Transmitter for all USAutomatic operators
- Operating Frequency 433.92 MHz

LCR 2 Button or 4 Button Premium Transmitter

2 Button Part Number 030217
4 Button Part Number 030218

- Fixed or clone programmable
- Operating Frequency 433.92 MHz

LCR Basic Wireless Keypad

Part Number 050500

- Operating Frequency 433.92 Mhz
- 2 to 5 digit Access Codes
- Capable of storing 1 to 24 different access codes
- Access code can be programmed to either primary relay 1 or secondary relay 2.

LCR Premium Metal Wireless Keypad

Part Number 050551

- Rugged die-cast locking aluminum cover
- Up to 256 2-5 digit access codes and 256 temporary access codes
- Hold open access code
- Battery included or 12/24 VAC/DC external supply selectable
- Tamper lock out for 60 seconds after 7 incorrect access codes

Premium Metal Hardwired Keypad

Part Number 050700

- Rugged die-cast locking aluminum cover
- Up to 1000 permanent or temporary 2-5 digit access codes
- Stainless steel, blue LED backlit keypad
- 2 relays capable of operating for timed activation pf 1-99 seconds or for hold open latch mode
- Tamper lock out for 60 seconds after 7 incorrect access codes
- Night light and illuminated keys can be programmed for full time on or only when keys are pressed

7 Day Timer (Solar friendly device)

Part Number 550015 (CR2032 Button Cell Battery Included)

- Easy to program
- 17 events per day
- Time displayed in 24 hour format
- 12VDC only

Electric Gate Lock

Part Number 070510

Suitable for solar and AC charged systems.

The USAutomatic Control Board will energize and release this 12 VDC electric gate lock 1 second before the gate or gates begin to open.

Photo Eyes - BATTERY

Part Number 550011 (*Wire Not Included)*

- Battery powered emitter(Batteries Included)
- Eliminates wires across driveway to emitter
- Better reliability than reflector
- Input: 12V AC/DC or 24V AC/DC
- Range: 42 feet

Metal Photo Eyes

Part Number 550014 (*Wire Not Included)*

- Rugged metal housing
- Eye rotates up to 180 degrees
- Input: 12V AC/DC or 24V AC/DC
- Range: 65 feet

20 Watt Solar Panel Kit

Part Number 520031

- 2 mounting brackets included
- DC power plug for easy connection

Expansion Module Monitored Entrapment Device

Part Number 500015

The expansion module is designed to monitor for the connection and proper operation of multiple monitored external entrapment devices.

If the installation requires more than 1 monitored contact edge or 1 monitored photo eye for open or close direction, the expansion module must be installed.

Monitors up to 5 monitored contact edges (10K resistor) and up to 4 monitored photo eyes (N/C contact - NO 10K) for a total of 9 devices.

Troubleshooting Guide

The complete troubleshooting guide is available online which allows us to easily and quickly update the contents as required.

Scan the QR code here with your phone camera to access the troubleshooting information online. Or visit - www.usautomatic.com/troubleshooting

1. LED indicating lights

These lights will help to identify problems with the actuator limit switches and all control circuits. To use the indicators, press and hold the "LED Indicator" button on the control board. (The LED's are not active unless the LED indicator push button is pressed and held to save battery life). Any circuits or limit switches that are activated will be obvious by the illumination of the adjacent LED.

2. Current sense beeper

The beeper will sound anytime the current sense circuit is activated. This is useful in detecting a false reverse due to an improper or too sensitive current reverse setting, or a gate, which is requiring excessive force to move

3. S5 push button - Type D protection

Type D button will bypass all entrapment devices allowing gate operation. Verify gate path is clear before pressing button. Must hold button for gate operation.

4. Battery status LED

A. Solid Red - battery good
B. Flashing Red - battery has fallen below 10.5 vdc while in operation - battery needs to be load tested.
C. LED is OFF - battery has fallen below 10 vdc while in operation - battery needs to be load tested.

5. Low Batery Notification / Low Battery Shut Down

1. If the entrapment siren is beeping 3 times quickly then pausing for 5 seconds and repeating this for 60 seconds this indicates the battery has fallen below 10.5 vdc durring a gate cycle. Remove battery and have it load tested and check the charging system for proper operation.
2. If the gate has shut down in the open or closed gate position it is possible that the battery has dropped below 10 vdc durring a gate cycle. Gate will shut down in the selected position of DS1 switch 5. This can be verified by pressing the LED indicator button and observing the Battery Status LED. If fail condition exist remove battery and have it load tested to determine battery condition. If battery is good then charging system needs to be verified for proper operation.

6. Battery Reset

If gate is shut down and battery status LED is OFF when pressing the LED Indicator then press the Battery Reset button and hold for 7 seconds to reset. If gate now operates remove battery and have it load tested.

Congratulations on acquiring a USAutomatic Solar Powered Gate Operator.

Current tax codes may allow you to obtain a tax credit against the installed price of the USAutomatic Solar Gate Operator System and the cost of installation. It does not apply to the cost of the gate itself, or installation of the gate.

This Solar Tax Certificate may be submitted, along with the appropriate IRS form 5695 to qualify for the Residential Energy Efficiency Property Credit.

CERTIFICATION FOR SOLAR TAX CREDIT

Manufacturer's Certification for credit for residential energy efficient property qualified under internal revenue code section 25D

Name and Address of Manufacturer:

USAutomatic, LLC
170 Valley Ridge Blvd
Lewisville, TX 75057

Identification of Property:
Solar Electric Property

Make and Model Numbers of Property Qualifying for Credit:

Patriot 1 Solar Charged Single Swing Operator - w/LCR (020035)
Patriot 2 Solar Charged Dual Swing Operator - w/LCR (020075)
Patriot RSL Solar Charged Slide Gate Operator - w/LCR (020430)
Ranger HD 1 Solar Charged Single Swing Operator - w/LCR (020518)
Ranger HD 1 Solar Charged Single Swing Operator - Metal Cabinet - w/LCR (020522)
Ranger HD 2 Solar Charged Dual Swing Operator - w/LCR (020519)
Ranger HD 2 Solar Charged Dual Swing Operator - Metal Cabinet - w/LCR (020523)
Ranger 500 1 Solar Single Swing Operator - w/LCR (020512)
Ranger 500 2 Solar Dual Swing Operator - w/LCR (020513)

The tax credit for owners of new residential and commercial solar systems is:

2016-2019: 30% of the cost of the system
2020-2021: 26% of the cost of the system
2022-2032: 30% of the cost of the system

** The rates shown above are subject to change by The United States Congress at any time. Please consult with your tax specialist prior to filing for your credit.*

Under penalties of perjury, I declare that I have examined this certification statement, and to the best of my knowledge and belief, the facts are true, correct, and complete. We are not providing tax consultation. Please refer to a qualified tax professional for more information.

Mike Storms
President - USAutomatic

WARRANTY*

USAutomatic LLC provides the following warranty from date of manufacture:

- All operators shall be free from defects in materials for a period of 3 years
- Ranger 500 and Ranger 500 control boards - current design – 3 year warranty
- Patriot and Patriot RSL control boards - current design – 5 year warranty
- Control boards - previous versions - 1 year warranty
- All accessories - 1 year warranty

This warranty excludes items that have been abused, misused, altered, incorrectly installed, damaged from battery acid, damaged by weather or other acts of God, or had lack of necessary maintenance. Changes or modifications not expressly approved by the Manufacturer will void the warranty.

This warranty is limited to the product only, no incidental or consequential damages are covered. Charges such as field labor and trip charges to inspect or reinstall a repaired or replaced unit are not covered. Replacement of battery is not covered. This warranty also does not cover any problems with the gate or gate hardware or any consequential damages to any surrounding area of the gates.

All warrantied products will be repaired or replaced at the discretion of the Manufacturer. All required parts, shop labor, and return shipping to our customer will be provided free of charge (within the contiguous United States).

SUPPORT

If you have operational questions, or are in need of warranty service, please contact our Support Department by email at support@usautomatic.com or call 972-221-7000 Monday through Friday (or toll free at 888-204-0174).

If your issue is not resolvable, our Service Department may request the product(s) be returned for warranty service. A Return Authorization Number (RA#) will be issued and you will be given instructions on how and where to return the product. Packages without an RA# written on the box may not be accepted.

We will need the following information:

Model: _____ Serial Number**: _____

Date of Purchase: _____/_____/_____ Purchased From: _____

*You may have other rights based on your State. Please refer to State Law for specific inclusions and exclusions.
**Serial Number can be found by opening operator cover and looking on the control board

USAutomatic, LLC
170 Valley Ridge Blvd
Lewisville, Texas 75057

sales@usautomatic.com
support@usautomatic.com

972-221-7000 or 888-204-0174

© USAutomatic, LLC, 2025 Rev. A
All rights reserved. No part of this may be reproduced by any means without the expressed written consent of the publisher.

Intertek

www.usautomatic.com

SPONSOR

MADE IN THE USA