DO NOT SCALE DRAWING

Notes:

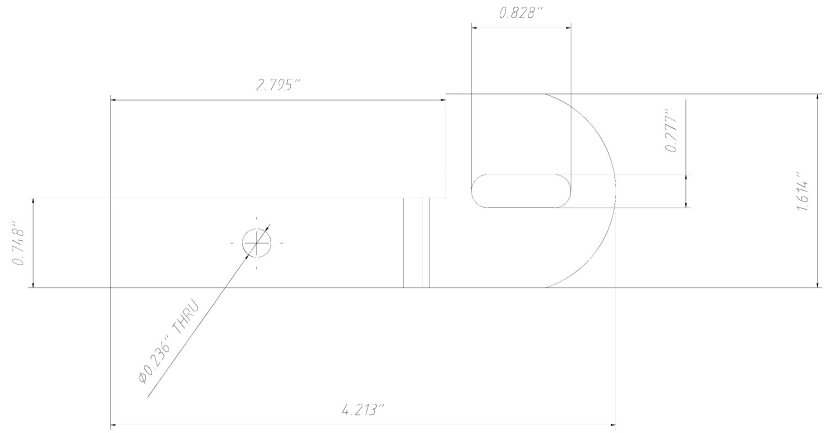

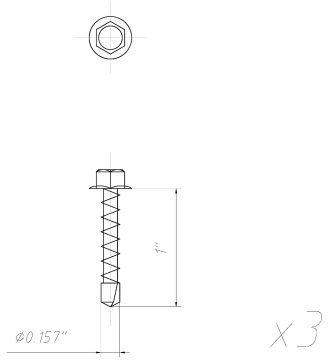

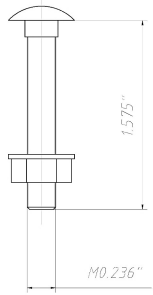

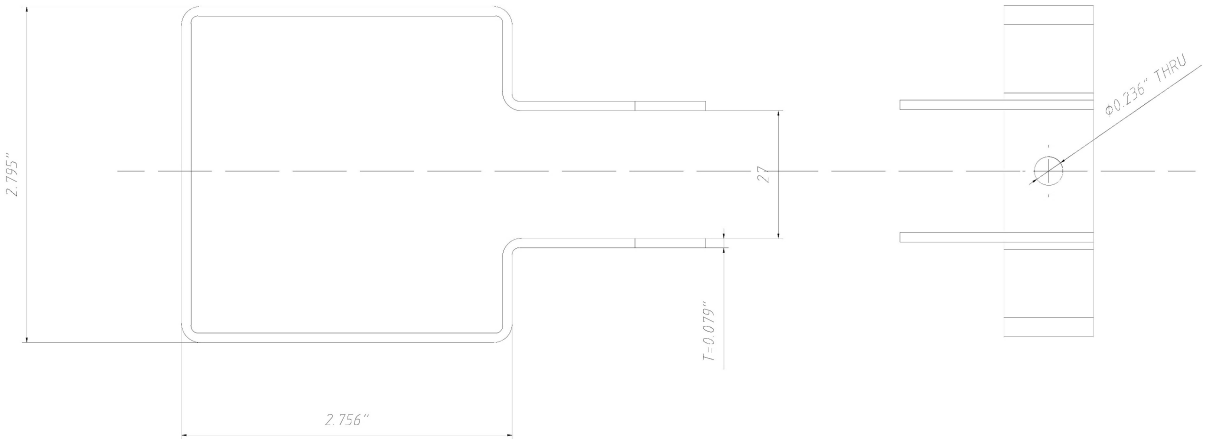

A-UBC Bracket

FIRST FENCE USA

Product Code:	001-000227		
Revision:	A	Date:	03/02/2026