DO NOT SCALE DRAWING

Notes:

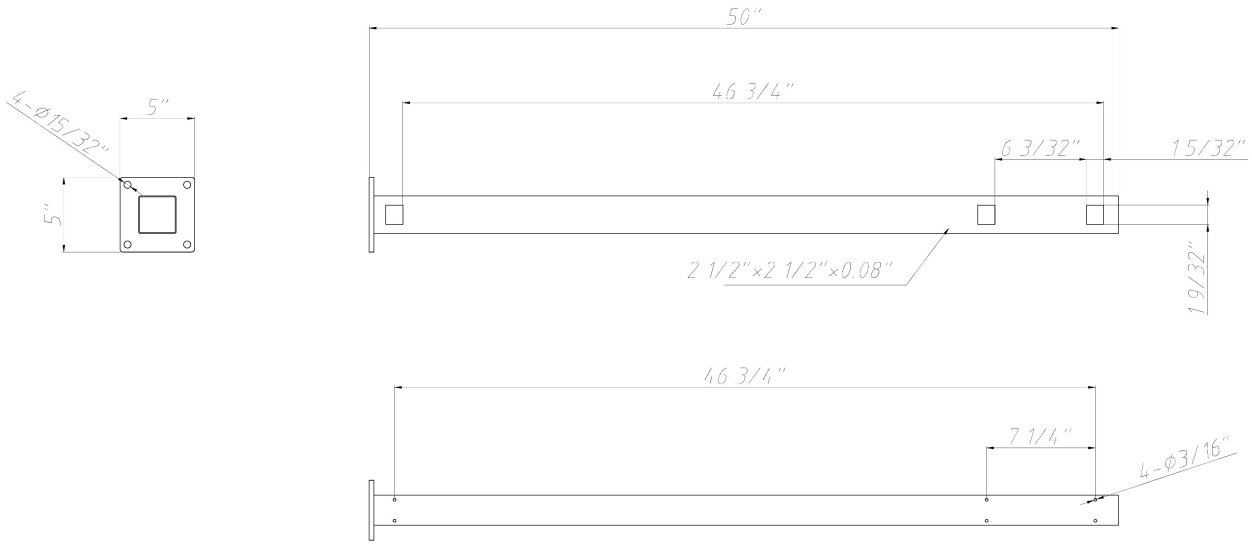

Aluminum Commercial Bolt Down Line Post for 3 Rail 48" High Fencing

FIRST FENCE USA

Product Code:	002-000194		
Revision:	A	Date:	02/25/2026