DO NOT SCALE DRAWING

Notes:

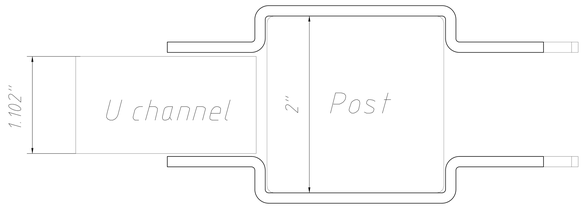

Assembly Diagram

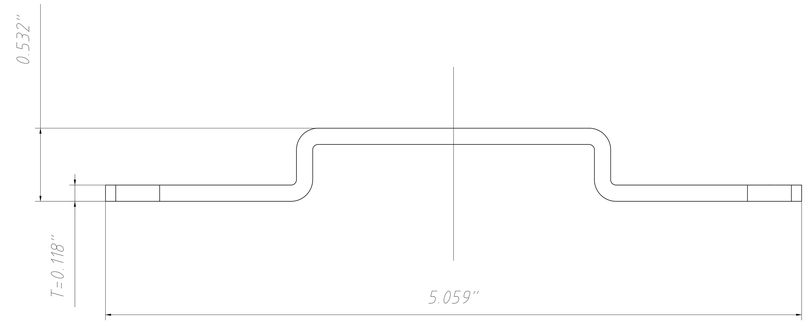

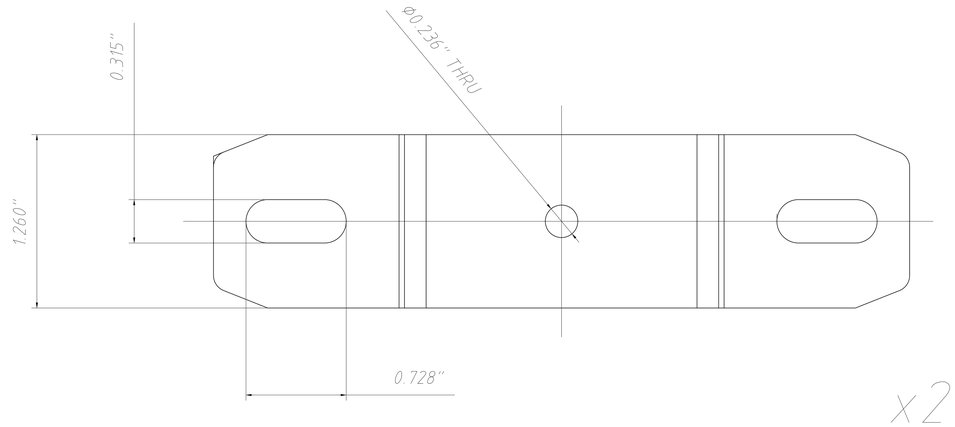

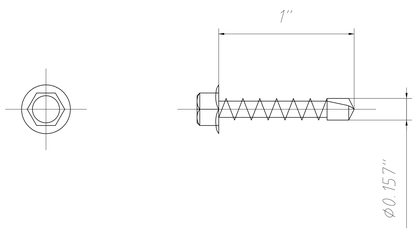

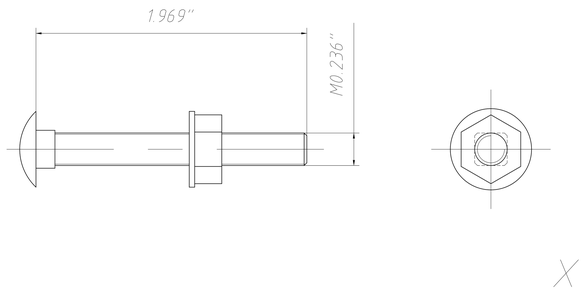

A-LBR Bracket

FIRST FENCE USA

Product Code:	001-000062		
Revision:	A	Date:	03/02/2026